5-4320-274-14&P

TM 5-4320-274-14&P

TECHNICAL MANUAL

OPERATOR, ORGANIZATIONAL, DIRECT SUPPORT AND GENERAL SUPPORT MAINTENANCE MANUAL INCLUDING REPAIR PARTS AND SPECIAL TOOLS LIST

PUMP, CENTRIFUGAL: FRAME MOUNTED, 1 1/2 IN. MIL-P-14514D, ELECTRICAL MOTOR DRIVEN, (E. C. SCHLEYER PUMP CO. MODEL 4M-SE2000) NSN 4320-01-010-5888

HEADQUARTERS, DEPARTMENT OF THE ARMY

3 NOVEMBER 1978

D 101.11:

READEX FICHE best copy available

WARNING

HIGH VOLTAGE
is used in the operation of this equipment.

DEATH ON CONTACT
may result if personnel fail to observe safety precautions.
Make sure the electrical power cable is disconnected from the power source before attempting maintenance on the pump.

WARNING

DANGEROUS CHEMICALS
Dry cleaning solvent, Specification P-D-680, used to clean parts is potentially dangerous to personnel and property.
Avoid repeated and prolonged skin contact.
Do not use near open flame or excessive heat.
Flash point of solvent is 100°F. (38°C.).

TECHNICAL MANUAL
No. 5-4320-274-14&P

HEADQUARTERS
DEPARTMENT OF THE ARMY
Washington, D. C., *3 November 1978*

OPERATOR, ORGANIZATIONAL, DIRECT SUPPORT, AND GENERAL SUPPORT MAINTENANCE MANUAL INCLUDING REPAIR PARTS AND SPECIAL TOOLS LIST

PUMP, CENTRIFUGAL: FRAME MOUNTED, 1 1/2 IN. MIL-P-14514D, ELECTRICAL MOTOR DRIVEN, (E. C. SCHLEYER PUMP CO. MODEL 4M-SE2000) NSN 4320-01-010-5888

REPORTING ERRORS AND RECOMMENDING IMPROVEMENTS

You can help improve this manual. If you find any mistake or if you know of a way to improve the procedures, please let us know. Mail your letter, DA Form 2028 (Recommended Changes to Publications and Blank Forms), or DA Form 2028-2 located in the back of this manual direct to: Commander, U. S. Army Troop Support and Aviation Materiel Readiness Command, ATTN: DRSTS-MTPS, 4300 Goodfellow Boulevard, St. Louis, MO 63120. A reply will be furnished to you.

Table of Contents

		Paragraph	Page
CHAPTER 1.	INTRODUCTION		
Section I.	General	1-1	1-1
II.	Description and Data	1-4	1-1
CHAPTER 2.	OPERATING INSTRUCTIONS		
Section I.	Operating Procedures	2-1	2-1
II.	Operation Under Unusual Conditions	2-5	2-3
CHAPTER 3.	OPERATOR/CREW MAINTENANCE INSTRUCTIONS		
Section I.	Lubrication	3-1	3-1
II.	Preventive Maintenance Checks and Services	3-3	3-1
III.	Troubleshooting	3-5	3-3
CHAPTER 4.	ORGANIZATIONAL MAINTENANCE INSTRUCTIONS		
Section I.	Service Upon Receipt of Equipment	4-1	4-1
II.	Movement to a New Worksite	4-4	4-4
III.	Repair Parts, Special Tools and Equipment	4-6	4-4
IV.	Lubrication Instructions	4-8	4-4
V.	Preventive Maintenance Checks and Services	4-9	4-4
VI.	Troubleshooting	4-11	4-6
VII.	Maintenance of Pump	4-13	4-8
CHAPTER 5.	DIRECT SUPPORT AND GENERAL SUPPORT MAINTENANCE INSTRUCTIONS		
Section I.	Repair Parts, Special Tools and Equipment	5-1	5-1
II.	Troubleshooting	5-3	5-1
III.	General Maintenance	5-5	5-4
CHAPTER 6.	REPAIR INSTRUCTIONS		
Section I.	Centrifugal Pump Assembly	6-1	6-1
II.	Electric Motor Assembly	6-7	6-3
CHAPTER 7.	ADMINISTRATIVE STORAGE		7-1
APPENDIX A.	REFERENCES		A-1

			Paragraph	Page
APPENDIX B.		MAINTENANCE ALLOCATION CHART		
Section	I.	Introduction		B-1
	II.	Maintenance Allocation Chart		B-2
	III.	Tool and Test Equipment Requirements (Not Applicable)		
APPENDIX C.		ORGANIZATIONAL, DIRECT SUPPORT, AND GENERAL SUPPORT MAINTENANCE REPAIR PARTS AND SPECIAL TOOLS LIST		
Section	I.	Introduction		C-1
	II.	Repair Parts List		C-5
	III.	Special Tools List (Not Applicable)		
	IV.	National Stock Number and Part Number Index		C-12
INDEX				Index-1

LIST OF ILLUSTRATIONS

Figure No.	Title	Page
1-1	Electric motor driven pump, left rear, three-quarter view	1-2
2-1	Priming instructions	2-2
2-2	Power cable	2-3
4-1	Electric power cable installation	4-2
4-2	Ground lead installation	4-3
4-3	Centrifugal pump assembly, removal and installation	4-9
4-4	Electric motor assembly, removal and installation	4-10
6-1	Centrifugal pump assembly, disassembly and reassembly	6-2
6-2	Electric motor, disassembly and reassembly	6-4
C-1	Frame assembly	C-8
C-2	Accessory items	C-9
C-3	Electric motor	C-10
C-4	Pump	C-11

CHAPTER 1
INTRODUCTION

Section I. GENERAL

1-1. Scope

This manual is for your use in operating and maintaining the E. C. Schleyer Pump Co. Model 4M-SE2000 electrical motor driven pump. Chapters 1 through 4 provide information relative to the operation, preventive maintenance and organizational maintenance of the equipment. Chapter 5 provides information on the direct support and general support maintenance. Chapter 6 provides repair instructions, and Chapter 7 provides information on administrative storage.

1-2. Maintenance Forms and Records

Maintenance forms and records that you are required to use are explained in TM 38-750.

1-3. Equipment Serviceability Criteria (ESC)

This equipment is not covered by an ESC.

Section II. DESCRIPTION AND DATA

1-4. Description

a. General. The electrical motor driven pump (fig. 1-1) is a portable, frame mounted unit designed to pump water at the rate of 65 gpm (gallons per minute) at 50 ft-tdh (feet-total dynamic head).

b. The pump is equipped with a Baldor Electric Co. motor, Model 617M. The motor is a 2 hp (horsepower) unit encased in a heavy duty housing. It is a totally enclosed fan cooled motor provided with permanently lubricated bearings, and watertight terminal box.

c. If you need a detailed description of any component of the electrical motor driven pump, refer to the applicable organizational maintenance information.

1-5. Identification and Tabulated Data

The E. C. Schleyer pump, Model 4M-SE2000, has three identification plates. The information on these plates follows:

a. Troop Support Command Identification Plate.

Manufacturer	E. C. Schleyer Pump Co., Inc.
Model	4M-SE2000
Serial	R113 (thru R523)
Nomenclature	Pump, centrifugal, self-priming, frame mounted, 1 1/2 in.
Capacity	65 gpm
NSN	4320-01-010-5888
Drive	EMD (Electric motor driven)
Contract	DSA700-75-C-8357
Code Ident	97403

b. Pump Manufacturers Identification Plate.

Nomenclature	Pump, centrifugal, 1 1/2 in., frame mtd, EMD, fresh water, 65 gpm, 50 ft. head
Model	4M-SE2000
Contract	DSA700-75-C-8357
Serial	R113 (thru R523)
Capacity	Blank
Registration No	Blank
GVW	Blank
Length	21 in. (53.3 centimeters)
NSN	4320-01-010-5888
Date Mfd	As applicable
Height	22 in. (55.8 centimeters)
Eng Ser	Blank
Ship Wt	110 lb. (49.5 kilograms)
Width	13 in. (33 centimeters)
Warranty	Blank
Month	Blank
Miles	Blank
Cube	4 ft. (0.112 cubic meters)
Date shipped	As applicable
Date Insp	As applicable
Mfd by	E. C. Schleyer Pump Co., Inc., Anderson, Indiana

Insp Stamp.....As applicable

c. Motor Manufacturers Identification Plate.

Manufacturer..... Baldor Electric Company
Model..... 617M
Type..... Induction
Phase..... 3
Volts.....208
Amperes.....5.7
Hertz.....60
Horsepower.....2
Revolutions per minute...3450
Enclosure.....TEFC
Duty.....Continuous

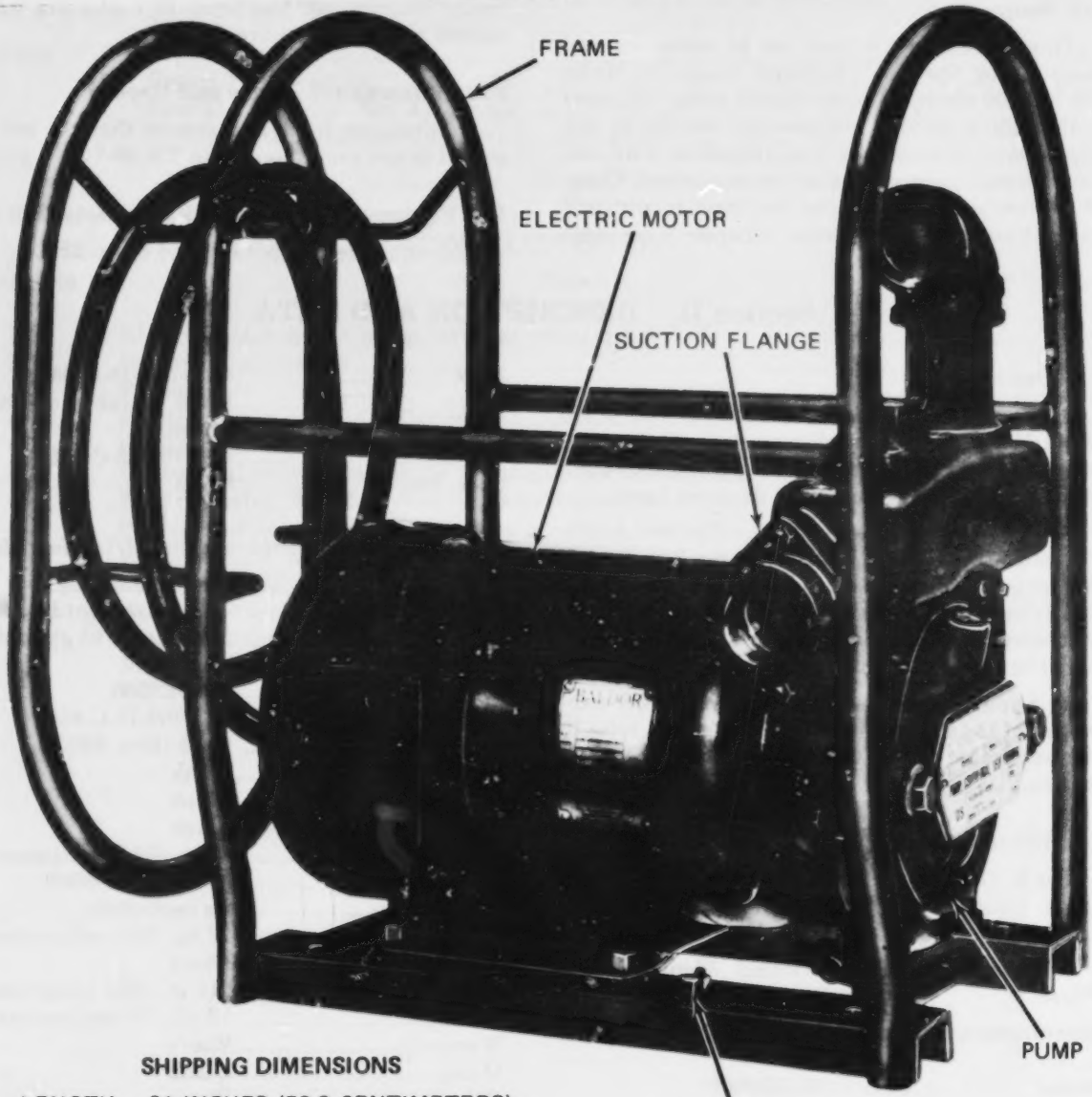

SHIPPING DIMENSIONS

LENGTH	21 INCHES (53.3 CENTIMETERS)
WIDTH	13 INCHES (33 CENTIMETERS)
HEIGHT	22 INCHES (55.8 CENTIMETERS)
WEIGHT	110 POUNDS (49.5 KILOGRAMS)

TM 4320-274-14/1-1

Figure 1-1. Electric motor driven pump, left rear, three-quarter view.

CHAPTER 2
OPERATING INSTRUCTIONS

WARNING

If equipment fails to operate, refer to troubleshooting procedures in Chapter 3.

Section I. OPERATING PROCEDURES

2-1. Operation of Centrifugal Pump

a. The instructions in this section are published for the information and guidance of the personnel responsible for the operation of the pumping units.

b. The operator must know how to perform every operation of which the pump units are capable. This section gives instructions on starting and stopping the pump units, operation of the pumping units, and on coordinating the basic motions to perform the specific tasks for which the equipment was designed. Since every job presents a different problem, the operator may have to vary given procedures to fit the individual job.

2-2. Starting

a. Preparation for Starting.

(1) Refer to paragraph 3-4 and perform the daily preventive services.

(2) Refer to figure 2-1 and prime pumping unit.

CAUTION

Never operate the pump unit until the body has been filled with water. Operating the pump dry will destroy the seal. When not in use, make sure the body is drained.

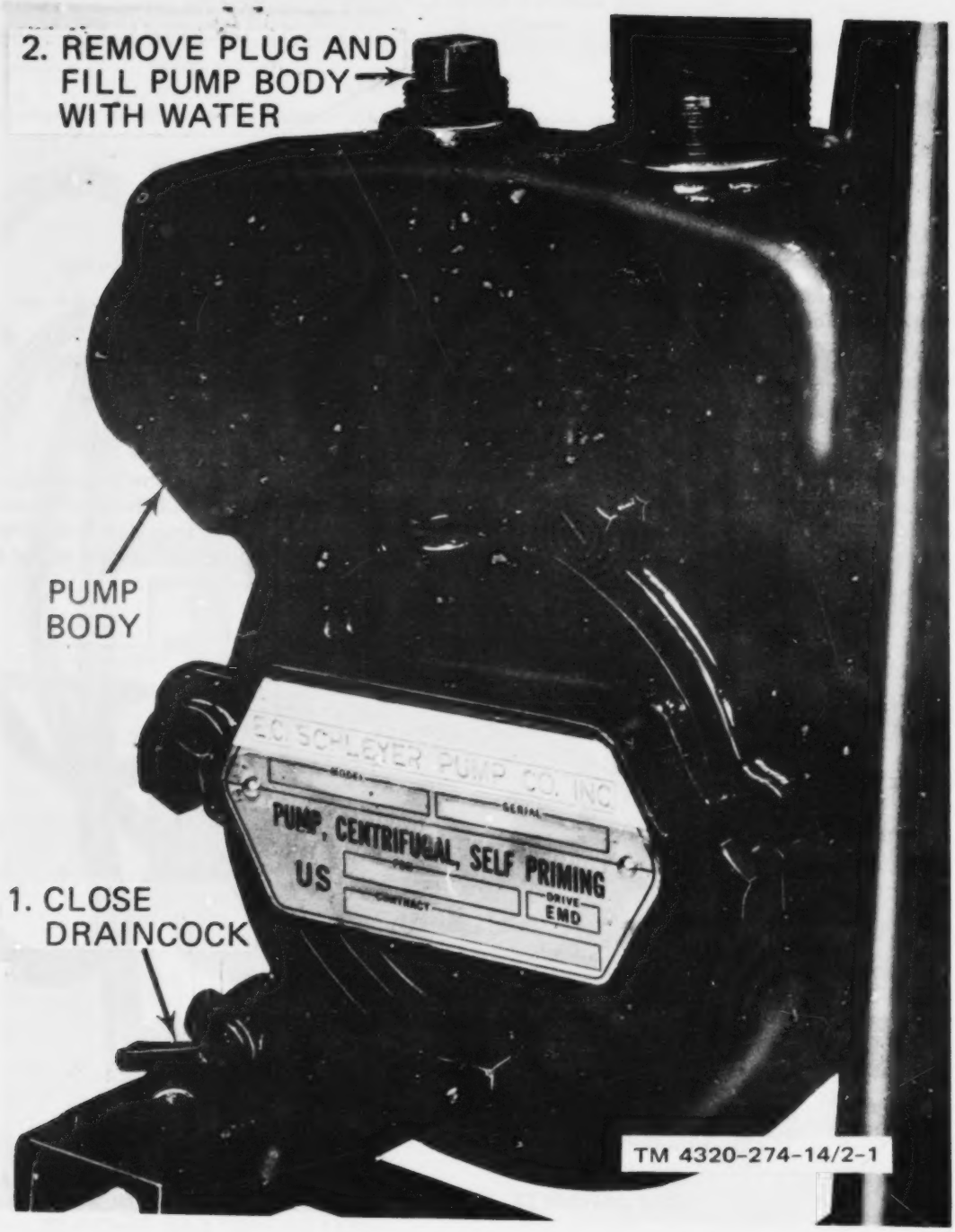

Figure 2-1. Priming instructions.

b. Starting Instructions. To start the electric motor powered pump, connect the power cable (fig. 2-2) to a 3 phase, 208 volt, 60 hertz power source.

2-3. Stopping

Disconnect the power cable from source of power.

2-4. Operation of Equipment

The operation of the pump is largely automatic. The operator should maintain constant watch for overheating, failure to perform to rated efficiency, and vibration. Proper care and maintenance will insure efficient operation.

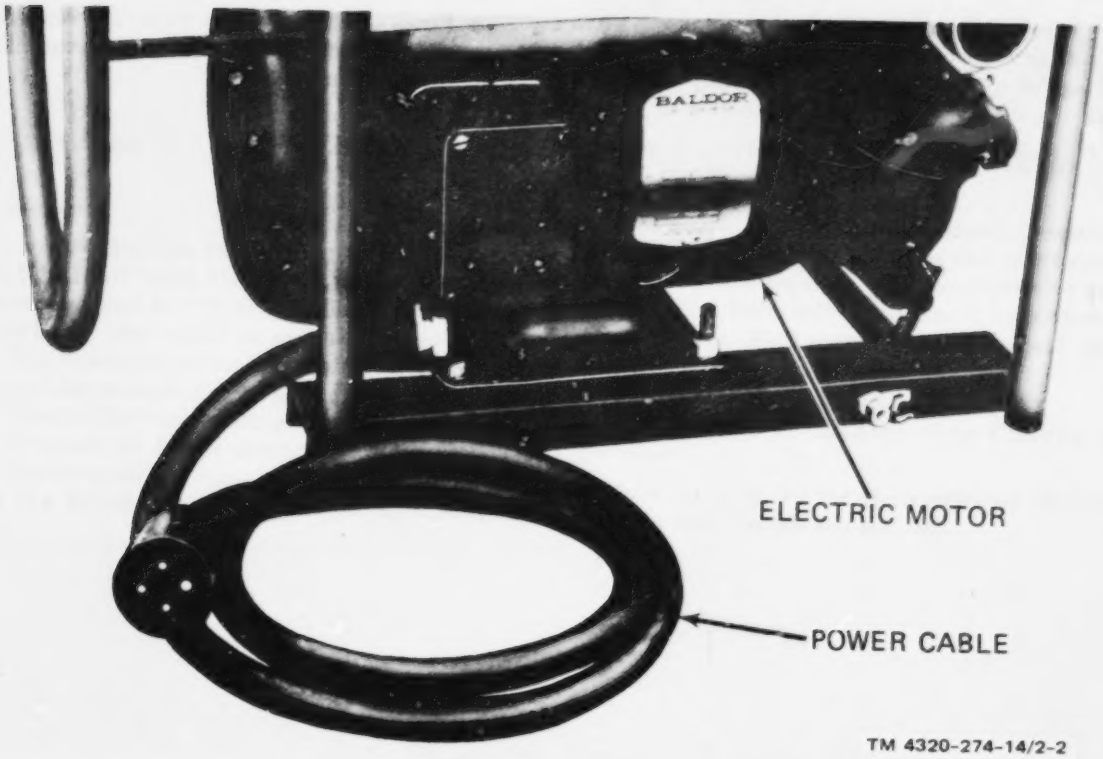

Figure 2-2. Power cable.

Section II. OPERATION UNDER UNUSUAL CONDITIONS

2-5. Operation in Extreme Cold

a. Keep the unit free of snow and ice. Cover the unit when not in use. Provide a suitable shelter for the unit during outside operation.

b. To avoid freezing, drain the pump after operation.

c. In extreme cold it may be necessary to preheat the pump body; apply heat cautiously and sparingly.

CAUTION

Do not overheat the pump body.

2-6. Operation in Extreme Heat

a. Protect the unit from the direct rays of the sun.

b. Maintain adequate space around the unit to provide for heat dissipation. If operating in an enclosure, provide a fan to circulate air when possible.

c. Keep the unit clean to provide proper heat transfer to the air.

2-7. Operation in Dusty or Sandy Areas

Shield the unit from dust. Take advantage of natural barriers which offer protection from blowing sand and/or dust, or erect a suitable shield if necessary.

2-8. Operation Under Rainy or Humid Conditions

a. Cover the unit with a waterproof cover when outside and inoperative. During operation, take advantage of natural barriers which offer protection from storms, or erect a suitable shelter to protect unit.

b. Keep electrical cables, wires, and parts free of moisture and clean.

2-9. Operation in Salt Water Areas

a. Salt water causes corrosive action on metal. Exercise care to keep the unit from contact with salt water. Wash the unit frequently with fresh water.

b. Paint all exposed non-polished metal surfaces with standard issue rust preventive, if available, or cover with a light coating of grease.

c. Flush the pump if salt water has entered the pump body. Flush if there has been a possibility of salt water contamination.

CHAPTER 3
OPERATOR/CREW MAINTENANCE INSTRUCTIONS

Section I. LUBRICATION

3-1. General

The electric motor powered pumps require no periodic lubrication.

3-2. Detailed Lubrication Information

The electric motor powered pumps have been prelubricated at the factory and require no specific lubrication. It may be necessary to use a fine oil around the bearings supporting the shaft in certain areas of operation. The operator should maintain a constant watch for lubrication failures.

Section II. PREVENTIVE MAINTENANCE CHECKS AND SERVICES

3-3. General

To insure that the pumping units are ready for operation at all times, they must be systematically inspected so that defects may be discovered and corrected before they result in serious damage or failure. The necessary preventive maintenance checks and services to be performed are listed in paragraph 3-4. Defects discovered during operation of the unit will be noted for future correction, to be made as soon as operation has ceased. Stop the unit immediately if a deficiency is discovered during operation which would damage the equipment if operation were continued. All deficiencies and shortcomings will be recorded together with the corrective action taken on DA Form 2404 (Equipment Inspection and Maintenance Worksheet) at the earliest opportunity.

3-4. Preventive Maintenance Checks and Services

Refer to table 3-1 for the applicable preventive maintenance checks and services.

Table 3-1. Preventive Maintenance Checks and Services

B--Before Operation D--During Operation
A--After Operation W--Weekly

Interval and Sequence No.				Item to be Inspected Procedure
B	D	A	W	
1				ELECTRICAL LINES AND CONNECTIONS Inspect lines for breaks and frayed insulation. Check for loose connections.
2				DRAINCOCK Check for leaks, improper operation, or other damage.
3				ELECTRIC MOTOR FAN GUARD Inspect for dirt, foreign matter and damage. The openings of the fan guard shall be clean and free of foreign matter and shall show no damage.
4				ELECTRIC MOTOR Check to see that the motor is securely mounted. The exterior surface of the motor should be clean, free of dust, dirt, grease, and fungus. All connections and terminals shall be secure.
5				PUMP BODY Inspect for cracks, leaks, or other damage. The exterior surface should be clean, free of dust, dirt, grease, and fungus.
	6			PUMP UNIT Inspect the entire unit for operational damage.
	7			PUMP UNIT Clean the pump unit with clear water, rinse and wipe dry.
		8		SUCTION VALVE Check the suction valve for proper operation and leaks.

Section III. TROUBLESHOOTING

3-5. General

a. This section contains troubleshooting information for locating and correcting most of the operating troubles which may develop in the electrical motor driven pump. Each malfunction for an individual component, unit, or system is followed by a list of tests or inspections which will help you to determine probable causes and corrective actions to take. You should perform the tests/inspections and corrective actions in the order listed.

b. This manual cannot list all malfunctions that may occur, nor all tests sr inspections and corrective actions. If a malfunction is not listed or is not corrected by listed corrective actions, notify your supervisor.

NOTE

Before you use this table, be sure you have performed all applicable operating checks.

Table 3-2. Troubleshooting

Malfunction
Test or Inspection
Corrective Action

ELECTRIC MOTOR

1. ELECTRIC MOTOR FAILS TO FUNCTION PROPERLY.

Check for loose or corroded wiring connections.
Clean corroded connections. Tighten loose connections at electric motor and ground.

2. ELECTRIC MOTOR OVERHEATS.

Step 1. Check power source voltage.
If the power source is too low, too high, or unbalanced, connect the electric motor to a proper power source.

Step 2. Check motor for binding.
If the motor has any restrictive rotation, notify organizational maintenance.

PUMP

3. PUMP FAILS TO FUNCTION PROPERLY

Check to see if air is entering pump body through loose connections.
Tighten loose connections and be certain hoses have no leaks.

4. PUMP LEAKS DURING OPERATION.

Inspect for any visible leakage near seals or suction valve.
Notify organizational maintenance, when leakage occurs.

5. NO WATER OR INSUFFICIENT WATER OUTLET PRESSURE.

Step 1. Ascertain if pump is primed.
Prime pump.

Step 2. Inspect suction line for clogging.
Remove the suction line, clean clogged area and replace on unit.

CHAPTER 4
ORGANIZATIONAL MAINTENANCE INSTRUCTIONS

Section I. SERVICE UPON RECEIPT OF EQUIPMENT

4-1. Inspecting and Servicing Equipment

a. Inspection.

(1) Make a complete visual inspection of the unit to assure that all accessories, attachments, publications, and required tools have been delivered with the pumping assembly.

(2) Inspect the unit for loss of parts or hardware.

(3) Rotate the pump by hand prior to starting the unit; this will assure freedom of action of components.

(4) If used equipment is being inspected, pay particular attention to all inspection procedures.

b. Servicing Equipment.

(1) Equipment is shipped complete and ready for operation.

(2) Perform the daily preventive maintenance checks and services (para 3-4).

4-2. Installation of Separately Packed Components

The pumps are packed as a single unit and therefore require no specific instructions for the installation of separately packed components.

4-3. Installation and Setting Up Instructions

a. Set the unit on a base of sufficient strength to support its weight and as level as possible and not more than 25 feet above liquid.

b. Connect suitable hose lines to the suction and discharge flange adapters.

c. Connect the electrical leads to the power cable as shown in figure 4-1.

NOTE

The cable has four color-coded conductors. The green conductor has an oversize lug at one end and is connected to the large pin of the plug connector. It is used to connect the frame of the electric motor to the power source ground system.

WARNING: DO NOT ATTEMPT MAINTENANCE ON WIRING WHEN CABLE IS CONNECTED TO POWER SOURCE

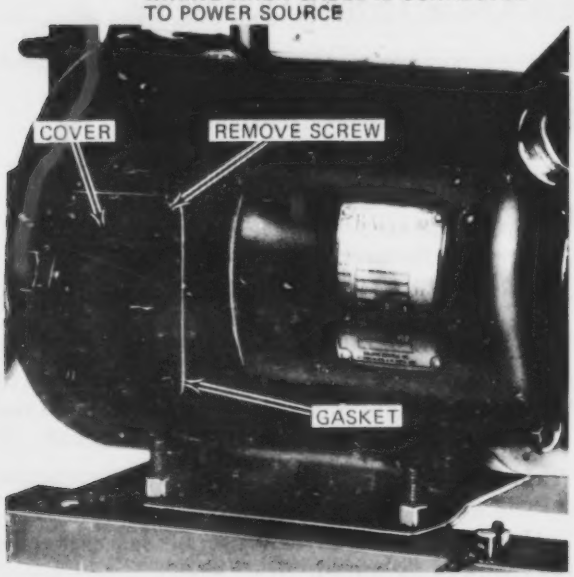

STEP 1. REMOVE COVER AND GASKET.

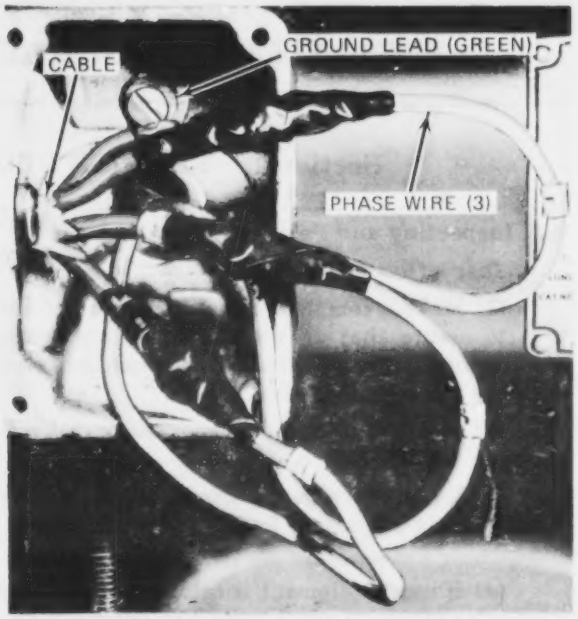

STEP 2. CONNECT GROUND LEAD AND CONNECT CABLE TO PHASE WIRES.

NOTE: REVERSE ANY TWO PHASE WIRE CONNECTIONS TO CHANGE PUMP ROTATION.

STEP 3. MOMENTARILY START PUMP BY CONNECTING POWER CABLE TO A 3 PHASE, 208 VOLT, 60 HERTZ POWER SOURCE. CHECK FAN TO SEE THAT PUMP ROTATES IN DIRECTION OF ARROW.

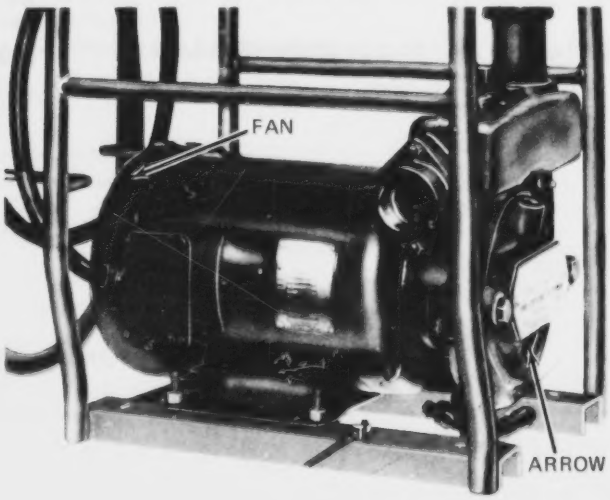

TM 4320-274-14/4-1

Figure 4-1. Electric power cable installation.

d. If the large pin socket of the power source receptacle is not connected to the power source ground system, install a ground lead, not smaller than No. AWG 6 copper wire as indicated in figure 4-2.

e. Connect the other end of the ground lead to the closest ground system, an underground metallic water piping system or the steel frame of a building.

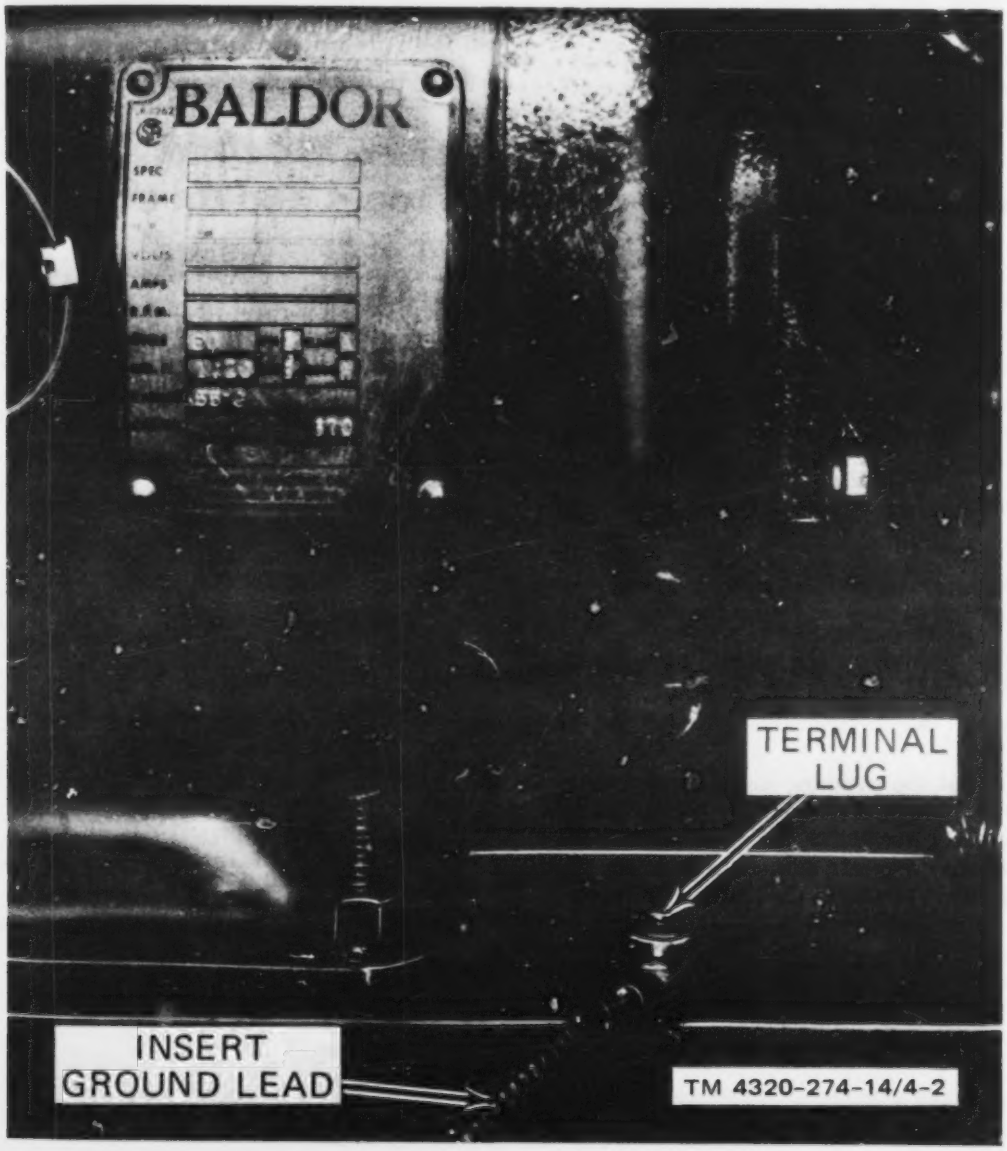

Figure 4-2. Ground lead installation.

Section II. MOVEMENT TO A NEW WORKSITE

4-4. Dismantling for Movement

a. Disconnect the hose lines from the flange adapters.

b. Cover the suction and discharge flange adapters to protect the threads and prevent foreign matter from entering the pump.

c. Disconnect the ground lead from terminal lug (fig. 4-2).

4-5. Reinstallation After Movement

Refer to paragraph 4-3 and reinstall the pump unit.

Section III. REPAIR PARTS, SPECIAL TOOLS, AND EQUIPMENT

4-6. Tools and Equipment

a. Basic tools and repair parts issued with, or authorized for the pumping unit are listed in Appendix C of this manual.

b. No special tools or equipment are required by organizational personnel for maintenance of the pumping unit.

4-7. Organizational Maintenance Repair Parts

Repair parts and equipment are listed and illustrated in the repair parts and special tools list covering organizational maintenance for this equipment in Appendix C of this manual.

Section IV. LUBRICATION INSTRUCTIONS

4-8. The electric motor powered pump has been prelubricated at the factory and requires no specific lubrication.

Section V. PREVENTIVE MAINTENANCE CHECKS AND SERVICES

4-9. General

To insure that the pumping units are ready for operation at all times, they must be systematically inspected so that defects may be discovered and corrected before they result in serious damage or failure. The necessary preventive maintenance checks and services to be performed are listed in paragraph 4-10. All deficiencies and shortcomings will be recorded together with the corrective action taken on DA Form 2404 (Equipment Inspection and Maintenance Worksheet).

4-10. Preventive Maintenance Checks and Services

Refer to table 4-1 for the applicable preventive maintenance checks and services.

Table 4-1. Preventive Maintenance Checks and Services

M--Monthly Q--Quarterly

Interval Sequence No.		Item to be Inspected Procedure
M	Q	
1	10	APPEARANCE OF EQUIPMENT Clean entire unit with clear water, rinse and dry.
2	11	ELECTRICAL LINES AND CONNECTIONS Inspect lines for breaks and frayed insulation. Check for loose connections.
3	12	DRAINCOCK Check for leaks, improper operation, or other damage.
4	13	ELECTRIC MOTOR FAN GUARD Inspect for dirt, foreign matter and damage. The openings of the fan guard shall be clean and free of foreign matter and shall show no damage.
5	14	ELECTRIC MOTOR Check to see that the motor is securely mounted. The exterior surface of the motor should be clean, free of dust, dirt, grease, and fungus. All connections and terminals shall be secure.
6	15	HARDWARE Check that all hardware is secure and tight.
7	16	PUMP BODY Inspect for cracks, leaks, or other damage. The exterior surface should be clean, free of dust, dirt, grease, and fungus.
8	17	PUMP UNIT Inspect the entire unit for operational damage. Check each component for wear or damage.
9	18	SUCTION VALVE Check the suction valve for proper operation and leaks.

Section VI. TROUBLESHOOTING

4-11. General

This section provides information useful in diagnosing and correcting unsatisfactory performance or failure of the pumping units and components. Malfunctions which may occur are listed in paragraph 4-12.

4-12. Troubleshooting

Refer to table 4-2 for troubleshooting procedures.

Table 4-2. Troubleshooting

Malfunction
Test or Inspection
Corrective Action

ELECTRIC MOTOR

1. ELECTRIC MOTOR FAILS TO FUNCTION PROPERLY.

Step 1. Check for loose or corroded wiring connections.
Tighten loose connections at electric motor and ground. Clean corroded connections.

Step 2. Check for correct connection of phase wires.
Reverse phase wires in accordance with paragraph 4-3.

Step 3. Check for defective motor.
If phase wires, ground and power source are wired correctly but the motor does not function properly, replace the motor.

2. ELECTRIC MOTOR OVERHEATS.

Step 1. Check power source voltage.
If the power source is too low, too high, or unbalanced, connect the electric motor to a proper power source.

Step 2. Check motor for binding.
If the motor has any restrictive rotation, replace the motor.

PUMP

3. PUMP FAILS TO FUNCTION PROPERLY

Check to see if air is entering pump body through loose connections.
Tighten loose connections and be certain hoses have no leaks.

4. PUMP LEAKS DURING OPERATION.

Inspect for any visible leakage near seals or suction valve.
Any evidence of leakage, notify general support.

5. NO WATER OR INSUFFICIENT WATER OUTLET PRESSURE.

Step 1. Ascertain if pump is primed.
Prime pump.

Step 2. Inspect suction line for clogging.
Remove the suction line, clean clogged area and replace on unit.

Step 3. Excessive suction lift.
Locate pump closer to liquid.

Step 4. Air leaks on suction side of pump.
Correct air leaks.

Section VII. MAINTENANCE OF PUMP

4-13. Centrifugal Pump Assembly

a. The centrifugal pump is driven by the electric motor. The pump is designed to pump water at the rate of 65 GPM (gallons per minute) at 50 ft-tdh (feet-total dynamic head).

b. Removal.

(1) Refer to figure 4-3 and remove the cover plate shoulder bolts. Remove cover plate from the pump body.

(2) Remove impeller cap screw and remove impeller and key from the shaft adapter.

(3) Remove wear plate retaining screws, and remove wear plate. Remove shims, shaft adapter, and one-half of the seal assembly. Remove key from motor shaft.

(4) Remove pump mounting bolts and separate pump from the motor.

c. Installation.

(1) Refer to figure 4-3 and position the pump body on the motor. Secure with the three pump mounting bolts. Install one-half of seal assembly, and shaft adapter, on motor shaft using motor shaft key.

STEP 1. REMOVE COVER PLATE AND PRE-FORMED PACKING.

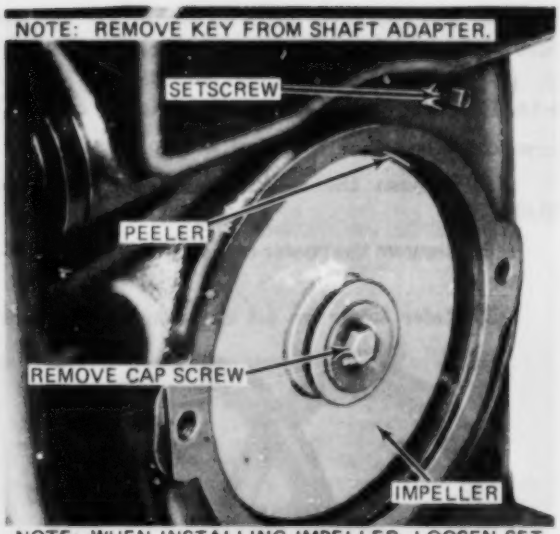

NOTE: WHEN INSTALLING IMPELLER, LOOSEN SET SCREW AND ADJUST PEELER-TO-IMPELLER CLEARANCE TO 0.005-0.015 IN.

STEP 2. REMOVE THE IMPELLER.

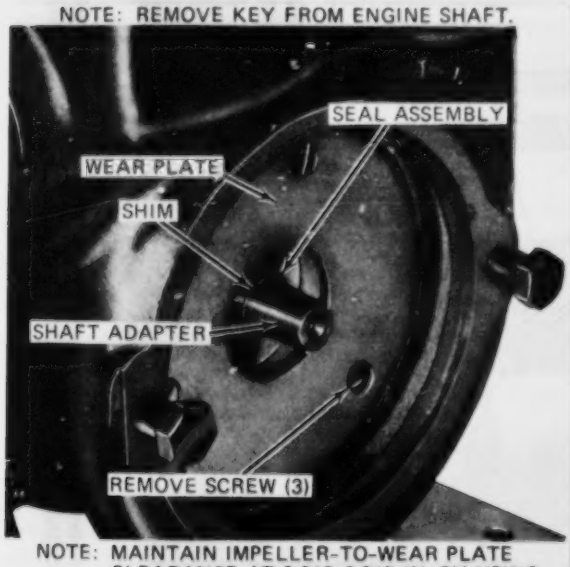

NOTE: MAINTAIN IMPELLER-TO-WEAR PLATE CLEARANCE AT 0.010-0.015 IN. BY USING SHIMS AS REQUIRED.

STEP 3. REMOVE WEAR PLATE, SHIMS, SHAFT ADAPTER, AND ½ OF SEAL ASSEMBLY.

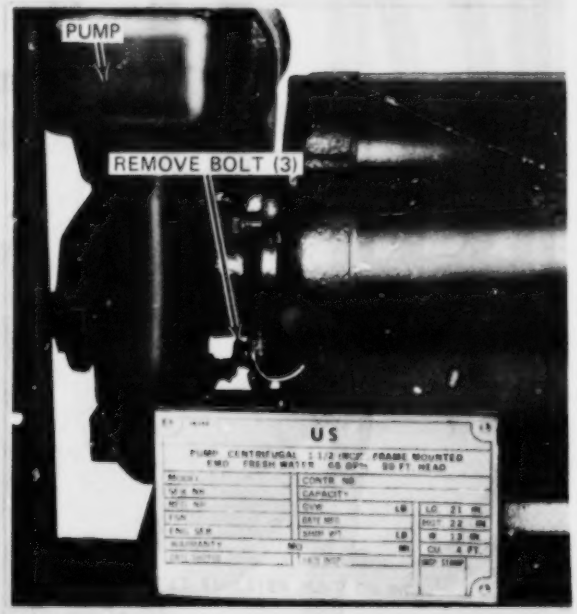

STEP 4. REMOVE PUMP.

TM 4320-274-14/4-3

Figure 4-3. Centrifugal pump assembly, removal and installation.

(2) Position wear plate on pump and secure with the wear plate retaining screws. Install shims as required to maintain wear plate-to-impeller clearance of 0.010-0.015 in.

(3) Loosen peeler adjustment setscrew. Position impeller on shaft adapter with the adapter key. Adjust setscrew to obtain peeler-to-impeller clearance of 0.005-0.015 in. Secure impeller with impeller cap screw.

(4) Position cover plate on pump body and secure with the cover plate shoulder bolts.

4-14. Electric Motor Assembly

a. Removal.

(1) Remove the centrifugal pump (para 4-13*b*).

(2) Remove the power cable shown in figure 4-1.

(3) Refer to figure 4-4 and remove the four nuts and cap screws securing the motor to the frame.

b. Installation.

(1) Position the motor on the frame and secure with four cap screws and nuts.

(2) Install the power cable shown in figure 4-1.

(3) Install the centrifugal pump per instructions in paragraph 4-13*c*.

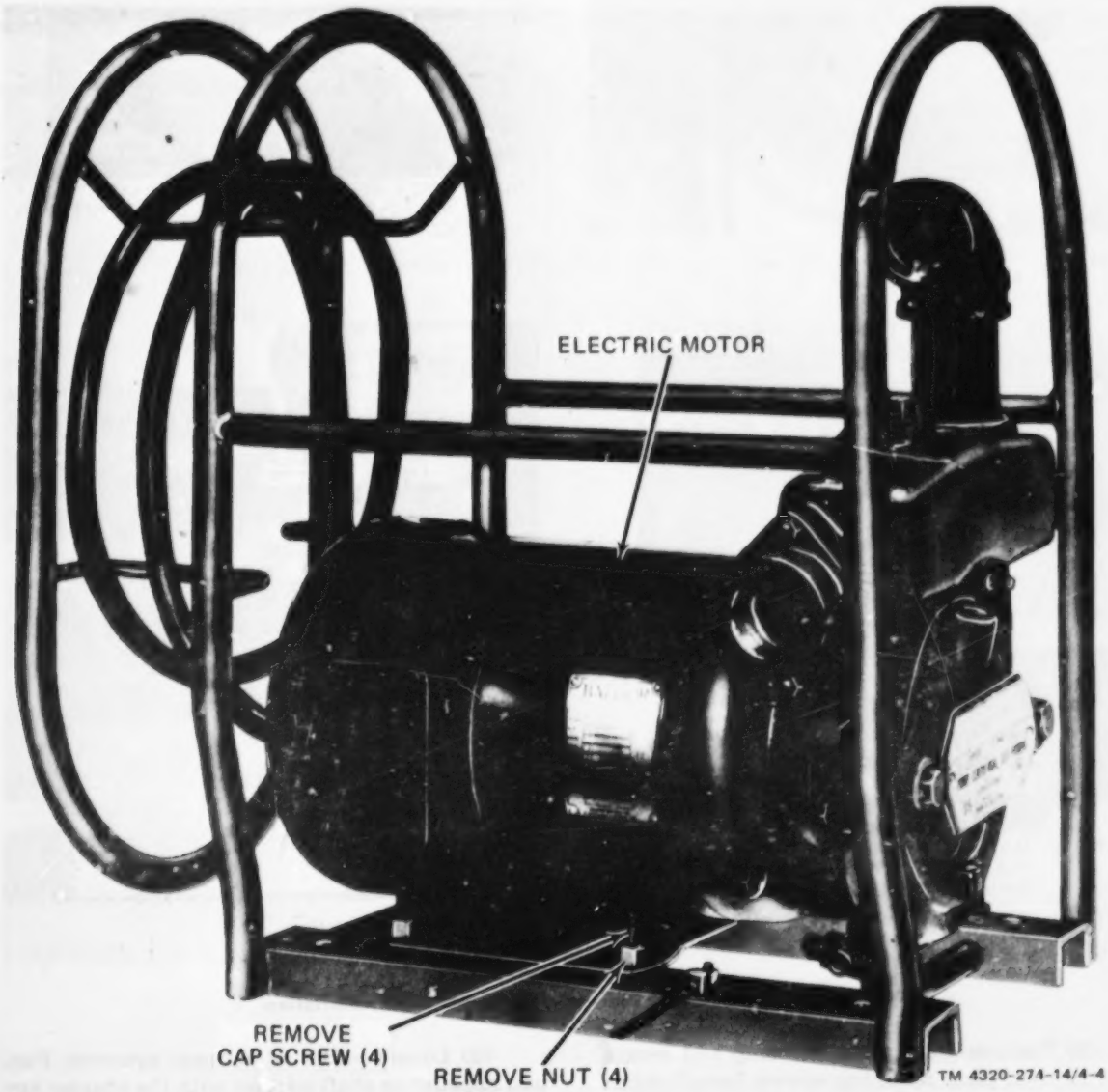

Figure 4-4. Electric motor assembly, removal and installation.

4-15. Frame

a. General. The frame is of welded steel construction and designed to permit easy handling.

b. Removal.

(1) Remove the electric motor assembly (para 4-14*a*).

(2) With the pump and motor removed, the frame is free of components.

c. Installation. Install the motor and pump (para 4-14*b*).

CHAPTER 5

DIRECT SUPPORT AND GENERAL SUPPORT MAINTENANCE INSTRUCTIONS

Section I. REPAIR PARTS, SPECIAL TOOLS, AND EQUIPMENT

5-1. Special Tools and Equipment

No special tools or equipment are required by direct support or general support personnel to maintain the pump unit.

5-2. Maintenance Repair Parts

Repair parts and equipment are listed and illustrated in the repair parts and special tools list covering direct support and general support maintenance for this equipment in Appendix C of this manual.

Section II. TROUBLESHOOTING

5-3. General

This section provides information useful in diagnosing and correcting unsatisfactory performance or failure of the pumping assembly or any of its components. Malfunctions which may occur are listed in Table 5-1.

5-4. Troubleshooting

Refer to table 5-1 for troubleshooting data.

Table 5-1. Troubleshooting

Malfunction
Test or Inspection
Corrective Action

PUMP

1. PUMP FAILS TO FUNCTION PROPERLY.

Step 1. Inspect impeller for damage or wear.
If damage or wear is apparent, replace impeller.

Step 2. Inspect adapter shaft and keys for damage.
If damage is apparent, replace damaged parts.

Step 3. Inspect the wear plate for worn areas.
If wear is obvious, replace the wear plate.

Step 4. Check peeler for proper clearance.
Adjust peeler (para 6-5).

Step 5. Check clearance of impeller-to-wear plate.
Adjust impeller-to-wear plate (para 6-5).

2. PUMP OPERATES WITH EXCESSIVE NOISE.

Step 1. Inspect for loose, broken or damaged impeller.
Tighten loose impeller; replace damaged impeller.

Step 2. Inspect for defective seal.
If defect is obvious, replace seal.

Step 3. Check peeler for proper clearance.
Adjust peeler (para 6-5).

3. PUMP LEAKS.

Step 1. Inspect check valve gasket for damage.
Replace damaged check valve gasket.

Step 2. Inspect seal for damage.
If damaged, replace seal.

Step 3. Inspect suction valve for damage.
If damaged, replace.

4. PUMP WILL NOT OPERATE.

Step 1. Check main power source for defective fuse and/or circuit breaker.
Replace fuse and/or reset circuit breaker.

Step 2. Inspect for frozen or damaged impeller.
Loosen or replace the impeller and inspect for proper clearance.

Table 5-1. Troubleshooting (Cont'd)

Malfunction
Test or Inspection
Corrective Action

ELECTRIC MOTOR

1. ELECTRIC MOTOR OVERHEATS.

Step 1. Inspect for defective bearings.
Replace defective bearings (para 6-11).

Step 2. Inspect and test for faulty stator windings.
Replace defective stator (para 6-11).

2. ELECTRIC MOTOR VIBRATES.

Step 1. Inspect for defective or broken fan.
If defects are apparent, replace fan (para 6-11).

Step 2. Inspect for defective bearings.
Replace defective bearings (para 6-11).

Step 3. Inspect for warped rotor shaft.
If warped, replace rotor (para 6-11).

3. ELECTRIC MOTOR FAILS TO START.

Step 1. Check for defective bearings.
If defective, replace bearings (para 6-11).

Step 2. Inspect and test for faulty stator windings.
Replace defective stator (para 6-11).

Step 3. Inspect for defective rotor.
If defective, replace rotor (para 6-11).

4. POWER LEAKAGE IN ELECTRIC MOTOR.

Step 1. Inspect for defective bearings.
Replace bearings (para 6-11).

Step 2. Inspect and test rotor and stator.
If defective, replace rotor and stator (para 6-11).

Section III. GENERAL MAINTENANCE

5-5. Electric Motor Testing

WARNING

Do not attempt maintenance on the motor when electrical cable is connected to the power source.

a. Preparation. Disconnect the power cable shown in figure 4-1.

b. Testing.

(1) Using a suitable test lamp circuit, test for continuity between each of the motor phase wires. Replace the motor if the lamp does not light. Test for grounds between one motor phase (any one) wire and the frame. If lamp is lit, replace the motor.

(2) Use a megohmmeter and measure the insulation resistance of the stator assembly as instructed in TM 5-764 (Electric Motor and Generator Repair). The insulation resistance should not be less than 0.25 megohms.

(3) Connect the electric motor leads to a balanced voltage source of 3-phase, 60 hertz, 208 volt power. Operate the motor under its normal load and measure the amperage in each motor lead with a hook-type ammeter. The amperage in the three leads should be equal and not more than 6.3 amperes per lead. Measure the shaft speed with a tachometer. The speed should not be less than 3450 rpm (revolutions per minute).

CHAPTER 6
REPAIR INSTRUCTIONS

Section I. CENTRIFUGAL PUMP ASSEMBLY

6-1. Pump Removal

a. Refer to figure 4-3 and remove the cover plate shoulder bolts. Remove cover plate from the pump body.

b. Remove impeller cap screw and washer; remove impeller and key from the shaft adapter.

c. Remove wear plate retaining screws and remove wear plate. Remove shims, shaft adapter, and one-half of the seal assembly. Remove key from motor shaft.

d. Remove pump mounting bolts and washers; separate pump from the electric motor.

6-2. Pump Disassembly

a. Refer to figure 6-1 and remove the two screws securing the identification plate to the pump cover plate (2).

NOTE

Items 1 through 14 (figure 6-1) were previously disassembled during the pump removal process.

Figure 6-1. Centrifugal pump assembly, disassembly and reassembly.

b. Remove setscrew (15), nut (16), and washer (17) from the pump body.

c. Remove adapter (18), elbow (19), nipple (20), and peeler (21) from the pump body.

d. Remove adapter (22) from flange (25). Remove two nuts (23) and washers (24), and separate flange (25) from the pump body.

e. Remove screw (26) and separate weights (27 and 28) from check valve gasket (29).

CAUTION

Do not pry with a sharp instrument as gasket may be damaged.

f. Remove draincock (39), studs (31), and plug (32) from the pump body (33).

6-3. Pump Cleaning and Inspection

a. Clean pump body with pressurized water, spraying interior and exterior. Allow to dry thoroughly.

WARNING

Dry cleaning solvent, Specification P-D-680, used to clean parts is potentially dangerous to personnel and property. Avoid repeated and prolonged skin contact. Do not use near open flame or excessive heat. Flash point of solvent is 100°F. (38°C.).

b. Clean pump components thoroughly. Use dry cleaning solvent, Specification P-D-680, on metal parts. Dry components thoroughly.

c. Inspect all parts for cracks, excessive wear, damage, or deterioration. Replace defective parts.

6-4. Pump Reassembly

a. Refer to figure 6-1 and install the plug (32), studs (31) and draincock (30) on the pump body (33).

b. Position gasket (29) so that hinge end is up. Make sure that large weight (27) is on pump side of the gasket. With small weight (28) positioned on the opposite side of the gasket, install the check valve gasket with screw (26).

c. Install flange (25) on pump body and secure with washers (24) and nuts (23). Install adapter (22) on the flange.

d. Install peeler (21), nipple (20), elbow (19) and adapter (18) on the pump body.

e. Position identification plate on the pump cover plate (2) and secure with screws. The remaining components will be assembled when the pump is installed.

6-5. Pump Installation

a. Refer to figure 4-3 and position the pump body on the electric motor. Secure with the three pump mounting bolts and washers. Install remaining half of seal assembly, and the shaft adapter, on the motor shaft using the motor shaft key.

b. Position wear plate on pump and secure with the wear plate retaining screws. Install shims as required to maintain wear plate-to-impeller clearance of 0.010 to 0.015 in.

c. Loosen peeler adjustment setscrew. Position impeller on shaft adapter with adapter key. Adjust setscrew to obtain peeler-to-impeller clearance of 0.005 to 0.015 inches. Secure impeller cap screw and washer.

d. Position cover plate on pump body and secure with the cover plate shoulder bolts.

6-6. Pump Test

a. Install the unit in accordance with paragraph 4-3 being certain the suction and discharge hoses and fittings are of the same nominal size as the suction and discharge ports of the pump.

b. Under the above conditions the pump shall perform as follows:

(1) Prime in not more than 133 seconds.

(2) Deliver not less than 58.5 gpm at a total head of 45 feet.

(3) Deliver not less than 45 gpm at a total head of 63 feet.

Section II. ELECTRIC MOTOR ASSEMBLY

6-7. Motor Removal

a. Remove the centrifugal pump (para 6-1).

b. Disconnect the motor power cable shown in figure 4-1.

c. Refer to figure 4-4 and remove the four nuts, washers, and screws securing the motor to the frame.

6-8. Motor Disassembly

a. Refer to figure 6-2 and remove screws (1), con-

duit box cover (2), and gasket (3) from the conduit box.

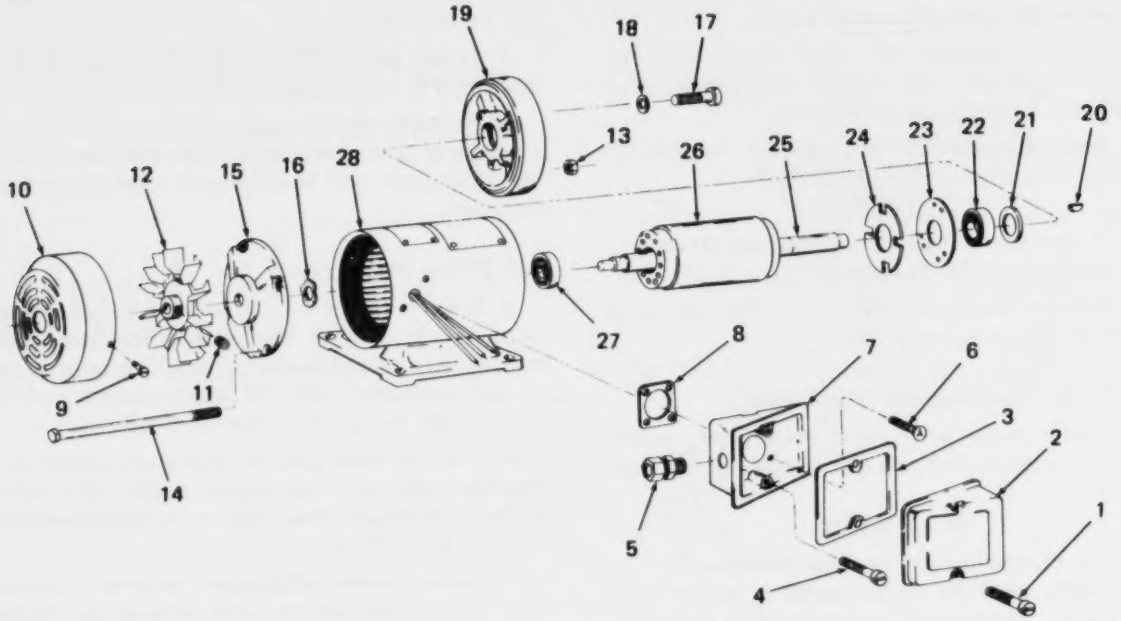

1. Screw	8. Gasket	15. End shield	22. Bearing
2. Cover	9. Screw	16. Spring washer	23. Bearing retainer
3. Gasket	10. Fan guard	17. Bolt	24. Fan (internal)
4. Gland screw	11. Setscrew	18. Washer	25. Shaft
5. Cable gland	12. Fan (external)	19. End shield	26. Rotor assembly
6. Screw	13. Nut	20. Key	27. Bearing
7. Conduit box	14. Bolt	21. Shaft sleeve	28. Stator assembly

Figure 6-2. Electric motor, disassembly and reassembly.

b. Remove gland screw (4) and cable gland (5) from the conduit box. Remove screws (6), conduit box (7), and conduit box gasket (8) from the motor housing.

c. Remove screw (9) and fan guard (19) from the motor housing. Remove setscrew (11) and fan (12) from the motor shaft.

d. Remove nuts (13), bolts (14), and end shield (15) from the motor housing. Remove spring washer (16) from the end shield.

e. Remove bolts (17), washers (18), and end shield (19) from the motor housing. Remove key (20), shaft sleeve (21), bearing (22), bearing retainer (23), and internal fan (24) from the shaft. Remove bearing (27) from opposite end of shaft.

6-9. Motor Cleaning, Inspection, and Testing

WARNING

Dry cleaning solvent, Specification P-D-680, used to clean parts is potentially dangerous to personnel and property. Avoid repeated and prolonged skin contact. Do not use near open flame or excessive heat. Flash point of solvent is 100°F. (38°C.).

a. Clean all parts using dry cleaning solvent, Specification P-D-680, and dry thoroughly.

b. Inspect all parts for cracks, excessive wear,

damage, or deterioration.

c. Use an inside growler and test the stator assembly for shorted coils as instructed in TM 5-764 (Electric Motor and Generator Repair). Place the rotor assembly on an external growler and test for open circuits (see TM 5-764).

d. Replace all damaged or defective parts.

6-10. Motor Rewind Data

The following motor rewind data is furnished in the event it is necessary to rewind the stator.

a. Stator:

(1) Number of poles.....2
(2) Number of coils.....36
(3) Number of slots.....36
(4) Turns per coil..13 turns of (2) No. 19 AWG conductors in parallel
(5) Coil span.....1-14
(6) Wire size.....No. 19 AWG
(7) Type of wire.....Type T, heavy Polythermalex coated round copper magnet wire per MIL-W-583A

Winding connection.....1 circuit WYE

b. Insulation materials:

(1) Slot cell.....5-5-5 DMD-100 (36 pcs.)
(2) Slot phase separator.....3-3-3 DMD-100 (36 pcs.)
(3) Slot wedge.....5-5-5 DMD-100 (36 pcs.)
(4) Phase group separator.....0.007 Polyester glass sheet (12 pcs.)
(5) Dipping compound.....Type AN, grade CB, clear baking varnish, per MIL-V-1137A P. D. George No. 2106, class F.

c. Dipping and baking procedure:

(1) Preheat to 225°F. (107°C.).

(2) Dip in baking varnish until bubbling ceases.

(3) Bake at 240°F. (116°C.) for four hours.

(4) Redip in baking varnish until bubbling ceases.

(5) Bake at 240°F. (116°C.) for eight hours.

(6) Spray with air dry varnish and air dry.

6-11. Motor Reassembly

a. Install rotor assembly (26, figure 6-2) on shaft (25). Install bearing (27), internal fan (24), bearing retainer (23), bearing (22), shaft sleeve (21), and key (20) on shaft.

b. Slide assembled rotor shaft through end shield (19) and install bolts (17) and washers (18). Install opposite end of rotor shaft through stator and install spring washer (16). Install end shield (15), bolts (14), and nuts (13).

c. Position fan (12) on rotor shaft and install setscrew (11). Install fan guard (19) on motor housing and fasten with screw (9).

d. Position conduit box gasket (8) and conduit box (7) on the motor housing and install the retaining screws (6). Install cable gland (5) and gland screw (4) on the conduit box. Install gasket (3), conduit box cover (2), and screws (1).

6-12. Motor Installation

a. Refer to figure 4-4 and position the motor on the frame. Install the four screws, washers, and nuts.

b. Connect the electrical power cable per instructions contained in figure 4-1.

c. Install the centrifugal pump (para 6-5).

CHAPTER 7
ADMINISTRATIVE STORAGE

7-1. Preparation of Equipment for Shipment

a. General. Detailed instructions for the preparation of the pumping unit for domestic shipment are outlined within this paragraph. Preservation will be accomplished in sequence that will not require the operation of previously preserved components.

b. Inspection. The pumping unit will be inspected for any unusual conditions such as damage, rusting, accumulation of water, and pilferage. Inspection of the individual components and assemblies will be as outlined in Preventive Maintenance Checks and Services, paragraph 3-4 of this manual.

c. Cleaning and Drying. Clean all surfaces of the pumping unit with approved cleaning solvent and dry thoroughly.

d. Painting. Remove rust and corrosion from areas to be painted by sanding. Paint the exposed and sanded surfaces.

e. Depreservation Guide. DA Form 2258 (Depreservation Guide for Vehicles and Equipment).

(1) A properly annotated depreservation guide will be completed concurrently with preservation for each item of mechanical equipment. Any peculiar requirements will be outlined in the blank space on the form. The completed depreservation guide will be placed with the equipment in a waterproof envelope marked "Depreservation Guide", and fastened in a conspicuous location on or near the operator's controls.

(2) Prior to placing equipment in operation or to the extent necessary for inspection, depreservation of the item will be performed as outlined on the depreservation guide.

f. Marking. The markings will conform to MIL-STD-129.

g. Power Cable. The power cable will be disconnected, coiled, and tied securely to the metal frame.

h. Basic Issue Items. All basic issue items will be packed with the publications in the crate with the pumping unit.

7-2. Loading Equipment for Shipment

The pumping units are not heavy but it is recommended that a light lifting device be utilized or two or more men lift the pump unit onto the carrier to assure that it will not move during transit.

7-3. Preparation of Equipment for Limited Storage

a. Detailed instructions for preparation of the pumping unit for limited storage are provided in TM 740-90-1. Limited storage is defined as storage not to exceed six months.

b. Every effort should be made to provide covered storage for the pumping unit. If this is impossible, select a firm, level, well-drained storage location, protected from prevailing winds. Position the pumping unit on heavy planking, cover with a tarpaulin or other suitable waerproof covering. Secure in a manner that will provide the pumping unit maximum protection from the elements.

7-4. Inspection and Maintenance of Equipment in Limited Storage

Every 90 days, the pumping unit will be inspected as outlined in "Preventive Maintenance Checks and Services, Quarterly". After each inspection period, the pumping unit will be represerved as outlined in TM 740-90-1.

APPENDIX A
REFERENCES

A-1. Fire Protection

TB 5-4200-200-10	Hand Portable Fire Extinguishers for Army Users

A-2. Lubrication

C9100IL	Fuels, Lubricants, Oils and Waxes

A-3. Painting

TM 9-913	Painting Instructions for Field Use

A-4. Maintenance

TM 5-764	Electric Motor and Generator Repair
TM 38-750	The Army Maintenance Management System

A-5. Destruction

TM 750-244-3	Destruction of Material to Prevent Enemy Use

A-6. Storage

TM 740-90-1	Administrative Storage of Equipment

APPENDIX B
MAINTENANCE ALLOCATION CHART

Section I. INTRODUCTION

B-1. General

a. This section provides a general explanation of all maintenance and repair functions authorized at various maintenance levels.

b. Section II designates overall responsibility for the performance of maintenance functions on the identified end item or component and the work measurement time required to perform the functins by the designated maintenance level. The implementation of the maintenance functions upon the end item or component will be consistent with the assigned maintenance functions.

c. Section III lists the tools and test equipment required for each maintenance function as referenced from Section II. (Not Applicable).

B-2. Explanation of Columns in Section II

*a. **Column 1, Group Number.*** Column 1 lists group numbers to identify related components, assemblies, subassemblies, and modules with their next higher assembly. The applicable groups are listed in the MAC in disassembly sequence beginning with the first group removed.

*b. **Column 2, Component/Assembly.*** This column contains the noun names of components, assemblies, subassemblies and modules for which maintenance is authorized.

*c. **Column 3, Maintenance Functions.*** This column lists the functions to be performed on the item listed in Column 2. The maintenance functions are defined as follows:

*(1) **Inspect.*** To determine serviceability of an item by comparing its physical, mechanical, and/or electrical characteristics with established standards through examination.

*(2) **Test.*** To verify serviceability and detect incipient failure by measuring the mechanical or electrical characteristics of an item and comparing those characteristics with prescribed standards.

*(3) **Service.*** Operations required periodically to keep an item in proper operating condition, i.e., to clean (decontaminate), to preserve, to drain, to paint, or to replenish fuel, lubricants, hydraulic fluids, or compressed air supplies.

*(4) **Adjust.*** To maintain within prescribed limits, by bringing into proper or exact position, or by setting the operating characteristics to specified parameters.

*(5) **Align.*** To adjust specified variable elements of an item to bring about optimum or desired performance.

*(6) **Calibrate.*** To determine and cause corrections to be made or to be adjusted on instruments or test measuring and diagnostic equipments used in precision measurement. Consists of comparison of two instruments, one of which is a certified standard of known accuracy, to detect and adjust any discrepancy in the accuracy of the instrument being compared.

*(7) **Install.*** The act of emplacing, seating, or fixing into position an item, part or module (Component or assembly) in a manner to allow the proper functioning of an equipment or system.

*(8) **Replace.*** The act of substituting a serviceable like type part, subassembly, or module (component or assembly) for an unserviceable counterpart.

*(9) **Repair.*** The application of maintenance services (inspect, test, service, adjust, align, calibrate, or replace) or other maintenance actions (welding, grinding, riveting, straightening, facing, remachining or resurfacing) to restore serviceability to an item by correcting specific damage, fault, malfunction, or failure in a part, subassembly, module (component or assembly), end item, or system.

*(10) **Overhaul.*** That maintenance effort (service/action) necessary to restore an item to a completely serviceable/operational condition as prescribed by maintenance standards (i.e., DMWR) in appropriate technical publications. Overhaul is normally the highest degree of maintenance performed by the army. Overhaul does not normally return an item to a like new condition.

*(11) **Rebuild.*** Consists of those services/actions necessary for the restoration of unserviceable equipment to a like new condition in accordance

with original manufacturing standards. Rebuild is the highest degree of material maintenance applied to army equipment. The rebuild operation includes the act of returning to zero those age measurements (hours/miles, etc.) considered in classifying army equipment/components.

d. Column 4, Maintenance Category. This column is made up of sub-columns for each category of maintenance. Work time figures are listed in these sub-columns for the lowest level of maintenance authorized to perform the function listed in Column 3. These figures indicate the average active time required to perform the maintenance function at the indicated category of maintenance under typical field operating conditions.

e. Column 5, Tools and Equipment. This column is provided for referencing by code, the common tool sets (not individual tools), special tools, test and support equipment required to perform the designated function.

Section II. MAINTENANCE ALLOCATION CHART

FOR

Pump, Centrifugal: Frame Mounted, 1 1/2 in., MIL-P-14514, Type I, Electric Motor Driven (E. C. Schleyer Model 4M-SE2000)

(1) Group Number	(2) Component/ Assembly	(3) Maintenance Function	(4) Maintenance Category*					(5) Tools and Equipment
			C	O	F	H	D	
01	FRAME ASSEMBLY							
0101	Frame and Miscellaneous Hardware	Inspect	0.1					
		Replace		1.0				
02	ACCESSORY ITEMS							
0200	Cable Assembly, Electric	Inspect	0.1					
		Replace		0.5				
	Data Plates	Inspect	0.1					
		Replace				1.0		
03	ELECTRIC MOTOR ASSEMBLY							
0300	Motor Assembly	Inspect	0.1					
		Test			0.5			
		Replace		2.0				
		Repair			3.0			
		Overhaul				4.0		
04	PUMP ASSEMBLY							
0400	Pump	Inspect	0.2					
		Test				2.0		
		Replace		2.0				
		Repair			3.0			
		Overhaul				4.0		

* SUBCOLUMNS ARE AS FOLLOWS: C-OPERATOR/CREW O-ORGANIZATIONAL: F-DIRECT SUPPORT H-GENERAL SUPPORT D-DEPOT

** INDICATES WT/MH REQUIRED

APPENDIX C

ORGANIZATIONAL, DIRECT SUPPORT, AND GENERAL SUPPORT MAINTENANCE REPAIR PARTS AND SPECIAL TOOLS LIST

Section I. INTRODUCTION

C-1. Scope.

This appendix lists the repair parts and special tools for operation and performance of organizational, direct support, and general support maintenance of the E. C. Schleyer Pump Co. Model 4M-SE2000 electrical motor driven pump.

C-2. General.

This Repair Parts and Special Tools List is divided into the following sections:

a. Section II, Repair Parts List. A list of repair parts authorized for use in the performance of maintenance. The list also includes parts which must be removed for replacement of the authorized parts. Parts lists are composed of functional groups in ascending numerical sequence, with the parts in each group listed in figure and item number sequence. Bulk materials are listed in NSN sequence.

b. Section III, Special Tools List. (Not Applicable).

c. Section IV, National Stock Number and Part Number Index. A list, in ascending numerical sequence, of all National stock numbers appearing in the listings, followed by a list, in alphanumeric sequence, of all part numbers appearing in the listings. National stock number and part numbers are cross-referenced to each illustration figure and item number appearance. This index is followed by a cross-reference list of reference designations to figure and item numbers when applicable.

C-3. Explanation of Columns.

The following provides an explanation of columns found in the tabular listings:

a. Illustration. This column is divided as follows:

(1) Figure Number. Indicates the figure number of the illustration in which the item is shown.

(2) Item Number. The number used to identify each item called out in the illustration.

b. Source, Maintenance, and Recoverability Codes (SMR).

(1) Source Code. Source codes are assigned to support items to indicate the manner of acquiring support items for maintenance, repair, or overhaul of end items. Source codes are entered in the first and second positions of the Uniform SMR Code format as follows:

Code	*Definition*
PA	Item procured and stocked for anticipated or known usage.
PB	Item procured and stocked for insurance purpose because essentiality dictates that a minimum quantity be available in the supply systems.
PC	Item procured and stocked and which otherwise would be coded PA except that it is deteriorative in nature.
PD	Support item, excluding support equipment, procured for initial issue or outfitting and stocked only for subsequent or additional initial issues or outfittings. Not subject to automatic replenishment.
PE	Support equipment procured and stocked for initial issue or outfitting to specified maintenance repair activities.
PF	Support equipment which will not be stocked but which will be centrally procured on demand.
PG	Item procured and stocked to provide for sustained support for the life of the equipment. It is applied to an item peculiar to the equipment which, because of probable discontinuance or shutdown of production facilities, would prove uneconomical to reproduce at a later time.
KD	An item of a depot overhaul/repair kit and not purchased separately. Depot kit

Code	Definition
	defined as a kit that provides items required at the time of overhaul or repair.
KF	An item of a maintenance kit and not purchased separately. Maintenance kit defined as a kit that provides an item that can be replaced at organizational or intermediate levels of maintenance.
KB	Item included in both a depot overhaul/repair kit and a maintenance kit.
MO	Item to be manufactured or fabricated at organizational level.
MF	Item to be manufactured or fabricated at the direct support maintenance level.
MH	Item to be manufactured or fabricated at the general support maintenance level.
MD	Item to be manufactured or fabricated at the depot maintenance level.
AO	Item to be assembled at organizational level.
AF	Item to be assembled at direct support maintenance level.
AH	Item to be assembled at general support maintenance level.
AD	Item to be assembled at depot maintenance level.
XA	Item is not procured or stocked because the requirements for the item will result in the replacement of the next higher assembly.
XB	Item is not procured or stocked. If not available through salvage, requisition.
XD	A support item that is not stocked. When required, item will be procured through normal supply channels.

NOTE

Cannibalization or salvage may be used as a source of supply for any items source coded above except those coded XA, XD, and aircraft support items as restricted by AR 700-42.

(2) Maintenance Code. Maintenance codes are assigned to indicate the levels of maintenance authorized to USE and REPAIR support items. The maintenance codes are entered in the third and fourth positions of the Uniform SMR Code format as follows:

(a) The maintenance code entered in the third position will indicate the lowest maintenance level authorized to remove, replace, and use the support item. The maintenance code entered in the third position will indicate one of the following levels of maintenance:

Code	Application/Explanation
C	Crew or operator maintenance performed within organizational maintenance.
O	Support item is removed, replaced, used at the organizational level.
I	Support item is removed, replaced, used by the direct support element of integrated direct support maintenance.
F	Support item is removed, replaced, used at the direct support level.
H	Support item is removed, replaced, used at the general support level.
D	Support items that are removed, replaced, used at depot, mobile depot, specialized repair activity only.

NOTE

Codes "I" and "F" will be considered the same by direct support units.

(b) The maintenance code entered in the fourth position indicates whether the item is to be repaired and identifies the lowest maintenance level with the capability to perform complete repair (i.e., all authorized maintenance functions). This position will contain one of the following maintenance codes:

Code	Application/Explanation
O	The lowest maintenance level capable of complete repair of the support item is the organizational level.
F	The lowest maintenance level capable of complete repair of the support item is the direct support level.
H	The lowest maintenance level capable of complete repair of the support item is the general support level.
D	The lowest maintenance level capable of complete repair of the support item is the depot level, mobile depot or specialized

Code	*Application/Explanation*
	repair activity.
L	Repair restricted to designated specialized repair activity.
Z	Nonreparable. No repair is authorized.
B	No repair is authorized. The item may be reconditioned by adjusting, lubricating, etc., at the user level. No parts or special tools are procured for the maintenance of this item.

(3) Recoverability Code. Recoverability codes are assigned to support items to indicate the disposition action on unserviceable items. The recoverability code is entered in the fifth position of the Uniform SMR Code format as follows:

Recoverability Codes	*Definition*
Z	Nonreparable item. When unserviceable, condemn and dispose at the level indicated in position 3.
O	Reparable item. When uneconomically reparable, condemn and dispose at organizational level.
F	Reparable item. When uneconomically reparable, condemn and dispose at the direct support level.
H	Reparable item. When uneconomically reparable, condemn and dispose at the general support level.
D	Reparable item. When beyond lower level repair capability, return to depot. Condemnation and disposal not authorized below depot level.
L	Reparable item. Repair, condemnation, and disposal not authorized below depot/specialized repair activity level.
A	Item requires special handling or condemnation procedures because of specific reasons (i.e., precious metal content, high dollar value, critical material or hazardous material). Refer to appropriate manuals/directives for specific instructions.

c. National Stock Number. Indicates the National stock number assigned to the item and will be used for requisitioning purposes.

d. Part Number. Indicates the primary number used by the manufacturer which controls the design and characteristics of the item by means of its engineering drawings, specifications standards, and inspection requirements, to identify an item or range of items.

NOTE

When a stock numbered item is requisitioned, the repair part received may have a different part number than the part being replaced.

e. Federal Supply Code for Manufacturer (FSCM). The FSCM is a 5-digit numeric code listed in SB 708-42 which is used to identify the manufacturer, distributor, or Government agency, etc.

f. Description. Indicates the Federal item name and, if required, a minimum description to identify the item.

g. Unit of Measure (U/M). Indicates the standard of the basic quantity of the listed item as used in performing the actual maintenance function. This measure is expressed by a two-character alphabetical abbreviation (e.g., ea, in, pr, etc.). When the unit of measure differs from the unit of issue, the lowest unit of issue that will satisfy the required units of measure will be requisitioned.

h. Quantity Incorporated in Unit. Indicates the quantity of the item used in the breakout shown on the illustration figure, which is prepared for a functional group, subfunctional group, or an assembly. A "V" appearing in this column in lieu of a quantity indicates that no specific quantity is applicable, (e.g., shims, spacers, etc.).

C-5. How to Locate Repair Parts

a. When National Stock Number or Part Number is Unknown:

(1) First. Using the table of contents, determine the functional group within which the repair part belongs. This is necessary since illustrations

are prepared for functional groups and listings are divided into the same groups.

(2) Second. Find the illustration covering the functional group to which the repair part belongs.

(3) Third. Identify the repair part on the illustration and note the illustration figure and item number of the repair part.

(4) Fourth. Using the Repair Parts Listing, find the figure and item number noted on the illustration.

b. When National Stock Number or Part Number is Known.

(1) First. Using the Index of National Stock Numbers and Part Numbers, find the pertinent National stock number or part number. This index is in ascending NSN sequence followed by a list of part numbers in ascending alphanumeric sequence, cross-referenced to the illustration figure number and item number.

(2) Second. After finding the figure and item number, locate the figure and item number in the repair parts list.

C-6. Abbreviations.

Abbreviations	*Explanation*
mtg	mounting

(1) ILLUSTRATION (a) FIG NO.	(b) ITEM NO.	(2) SMR CODE	(3) FEDERAL STOCK NUMBER	(4) PART NUMBER	(5) FSCM	(6) DESCRIPTION USABLE ON CODE	(7) U/M	(8) QTY INC IN UNIT
						SECTION II. REPAIR PARTS LIST		
						GROUP 01 FRAME ASSEMBLY		
C-1	1	PAOZZ	5305-00-068-0507	MS90725-6	96906	SCREW,CAP,HEXAGON H.....	EA	1
C-1	2	PAOZZ	5310-00-582-5965	MS35338-44	96906	WASHER LOCK-SPRING,HELICAL,REGULAR (MEDIUM)SERIES (IN./MM)1/4 NOM SIZE.....	EA	1
C-1	3	PAOZZ	5310-00-761-6892	MS51967-2	96906	NUT PLAIN,HEXAGON-CARBON STEEL,CADMIUM PLATED,UNC-2B (IN./MM)1/4-20 GR B.....	EA	1
C-1	4	PAOZZ	5305-00-993-2461	MS35207-281	96906	SCREW, MACHINE-PAN HEAD,CROSS-RECESSED,CARBON STEEL, CADMIUMPLATED,UNF-2A 1/4-28X.750L.....	EA	1
C-1	5	PAOZZ	5310-00-903-8287	MS21083N4	96906	NUT, SELF-LOCKING,HEXAGON,NON-METALLIC INSERT,LOW HEIGHT,250 DEGREE F .250-28 UNJF-3B STL.....	EA	1
C-1	6	PBFZZ	5940-00-114-1317	MS20659-109	96906	TERMINAL,LUG.....	EA	1
C-1	7	PAOZZ	5305-00-989-7435	MS35207-264	96906	SCREW MACHINE-PAN HEAD,CROSS-RECESSED,CARBON STEEL,CADMIUM PLATED,UNF-2A NO.10-32X.625 L.....	EA	3
C-1	8	PAOZZ	5310-00-902-6676	MS21083N3	96906	NUT SELF-LOCKING,HEXAGON,NON-METALLIC INSERT,LOW HEIGHT,250 DEGREE F .190-32 UNJF-3B STL.....	EA	3
C-1	9	PBFZZ	5940-00-204-9142	MS25036-12	96906	TERMINAL,LUG.....	EA	3
C-1	10	PAOZZ	5305-00-269-3214	MS90725-64	96906	SCREW, CAP,HEXAGON HEAD (FINISHED HEXAGON BOLT),STEEL,GRADE 5,CADMIUM PLATED,UNC-2A 3/8-16X4.500L.....	EA	4
C-1	11	PAOZZ	5310-00-732-0558	MS51967-8	96906	NUT PLAIN,HEXAGON-CARBON STEEL,CADMIUM PLATED,UNC-2B (IN./MM)3/8-16 GR B.....	EA	4
C-1	12	PAOZZ	5310-00-637-9541	MS35338-46	96906	WASHER LOCK-SPRING,HELICAL,REGULAR (MEDIUM) SERIES (IN./MM)3/8 NOM SIZE CS CD PLD.....	EA	4
C-1	13	PBOFH		13200E7218	97403	FR PUMP WELDMENT	EA	1
						GROUP 02 ACCESSORY ITEMS		
C-2	1	PBOZZ	6150-00-971-2116	13200E7222	96906	CABLE ASSEMBLY CABLE,ELECTRICAL,FLEX,HEAVY DUTY,INSULATED MAX VOLTAGE RATINGA00 V,MIL-C-3432.....	EA	1
C-2	2	PAOZZ	5305-00-259-5625	MS21318-46	96906	SCREW,DRIVE ROUND HEAD,TYPE U,STEEL,CARBON,CADMIUM PLATEDNO. 10-3X3/8L.....	EA	6
C-2	3	XBOZZ		A678607	78000	PLATE IDENT.....	EA	1
C-2	4	XBFZZ		13219E2434	96906	PLATE IDENT.....	EA	1
						GROUP 03 ELECTRIC MOTOR ASSEMBLY		
C-3		PBOFH	6105-00-793-6792	13200E7221	96906	MOTOR,ALTERNATING C 60 CYCLE,208V,2 2 HP.....	EA	1
C-3	1	PAOZZ	5305-00-855-0969	MS24629-35	96906	.SCREW.....	EA	4
C-3	2	PBOZZ		36-40	05476	.LID BOX.....	EA	1
C-3	3	PAOZZ		36-49	05476	.GASKET BOX LID.....	EA	1
C-3	4	PAOZZ	5305-00-206-2508	MS35215-53	96906	.SCREW,MACHINE.....	EA	1
C-3	5	PBOZZ	5975-00-281-0649	CG-5075	03799	.RELIEF-STRAIN.....	EA	1
C-3	6	PBFZZ		A678760	78000	.SCREW BOX MTG.....	EA	2
C-3	7	PBFZZ		36-2131	05476	.BOX CONNECTOR,ELECT.....	EA	1
C-3	8	PAFZZ		36-48	05476	.GASKET BOX.....	EA	1
C-3	9	PAOZZ	5305-00-765-2019	02781	05740	.SETSCREW NO.10-32X.313L.. P.M.M.S. SELF-TAPG. TYPE MBFM....	EA	3
C-3	10	XBOZZ		36-696	05476	.COVER FAN.....	EA	1
C-3	11	PAFZZ	5305-00-723-9385	MS51963	96906	.SETSCREW SQUARE HEAD,CUP POINT,STEEL,CADMIUM PLATED,UNC-2A, 1/4-20X1L	EA	4
C-3	12	XBOZZ		36-133	05476	.FAN EXTERNAL.....	EA	1
C-3	13	PAFZZ	5310-00-723-4458	MS35690-404	96906	.NUT,PLAIN,HEXAGON.....	EA	4

(1) ILLUSTRATION (a) FIG NO.	(b) ITEM NO.	(2) SMR CODE	(3) FEDERAL STOCK NUMBER	(4) PART NUMBER	(5) FSCM	(6) DESCRIPTION USABLE ON CODE	(7) U/M	(8) QTY INC IN UNIT
C-3	14	PAOZZ		36-37A	05472	.BOLT THRU 9 5/8 (IN. LIX 1/4-20 THD.1 3/8 (IN THREAD LENGTH) STEEL.....	EA	4
C-3	15	XBFZZ		36-2120	05472	.ENDPLATE PULLEY.....	EA	1
C-3	16	PBFZZ		52WER	05472	.WASHER RETAINER SPECIAL .022 THK 2.098 O.D. 1.575 I.D. .140 FREE HGT..059 SPRING STEEL.....	EA	1
C-3	17	PAOZZ	5305-00-995-3441	MS35207-269	96906	.SCREW MACHINE-PAN HEAD CROSS-RECESSED.CARBON STEEL.CADMIUM PLATEDUNF-2A.....	EA	2
C-3	18	PAOZZ	5310-00-045-3298	MS35338-43	96906	.WASHER LOCK -SPRING,HELICAL, REGULAR (MEDIUM) SERIES.....	EA	2
C-3	19	XBFZZ		36-694	05472	.ENDPLATE FRONT	EA	1
C-3	20	PAOZZ	5315-00-043-1787	MS35756-34	96906	.KEY,WOODRUFF.....	EA	1
C-3	21	PBOZZ		6-31	05472	.SLEEVE SHAFT.....	EA	1
C-3	22	PAFZZ	3110-00-109-1157	205SZZ	38993	.BEARING,BALL,ANNULA.....	EA	2
C-3	23	XBFZZ		6-417	05472	.RETAINER BRG.....	EA	1
C-3	24	XBFZZ		36-1008	05472	.FAN INTERNAL.....	EA	1
C-3	25	XAFZZ		36-3598	05472	.SHAFT.....	EA	1
C-3	26	XBFZZ	6105-00-717-1361	36-271	05472	.ROTOR.....	EA	1
C-3	27	XBHZZ	6105-00-717-1283	36-2118	05472	.STATOR W/BASE.....	EA	1
						GROUP 04 PUMP ASSEMBLY		
C-4	1	PBFZZ	5306-00-688-5722	13200E7212	97403	BOLT,SHOULDER.....	EA	2
C-4	2	XBFZZ		13200E7203	97403	COVER PLATE.....	EA	1
C-4	3	PBFZZ	5330-00-527-8116	MS29513-252	96906	PACKING.....	EA	1
C-4	4	PBFZZ	5306-00-225-9093	MS90726-38	96906	BOLT MACHINE.....	EA	4
C-4	5	PAOZZ	5310-00-407-9566	MS35338-45	96906	WASHER,LOCK.....	EA	6
C-4	6	PBFZZ		13214E9380-5	97403	WASHER.....	EA	1
C-4	7	PBFZZ	4320-00-784-6797	13200E7204	97403	IMPELLER.....	EA	1
C-4	8	PBFZZ	5305-00-957-6657	MS35198-67	96906	SCREW.....	EA	3
C-4	9	PBFZZ		13200E7214	97403	PLATE WEAR.....	EA	1
C-4	10	PAFZZ	5310-00-133-4598	MIL-S-22499	81349	WASHER,FLAT.....	EA	REF
C-4	11	PBFZZ	5315-00-989-2342	MS20066-183	96906	KEY.....	EA	1
C-4	12	PBFZZ	4320-00-784-6799	13200E7205	97403	ADAPTER SHAFT.....	EA	1
C-4	13	PBFZZ	4320-00-790-6357	13200E8806	97403	SEAL SHAFT.....	EA	1
C-4	14	PBFZZ	5305-00-054-9261	MS51955-5	96906	SETSCREW.....	EA	1
C-4	15	PAFZZ	5310-00-851-2674	MS35691-1	96906	NUT.....	EA	1
C-4	16	PBFZZ	5310-00-133-4598	NAS1515H4	80205	WASHER,FLAT.....	EA	1
C-4	17	PBOZZ		33074	20266	CONNECTION.....	EA	1
C-4	18	PBOZZ	4730-00-277-5636	13218E0058-26	97403	ELBOW PIPE 90.....	EA	1
C-4	19	PBOZZ	4730-00-277-8891	MS51953-172	96906	NIPPLE.....	EA	1
C-4	20	PBFZZ		13200E7213	97403	PEELER.....	EA	1
C-4	21	XBOZZ		47015	20266	ADAPTER.....	EA	1
C-4	22	PAOZZ	5310-00-880-7746	MS51968-5	96906	NUT,PLAIN,HEXAGON.....	EA	2
C-4	23	PBOZZ	4320-00-103-8199	13200E7224	97403	FLANGE ASSEMBLY.....	EA	1

(1) ILLUSTRATION (a) FIG NO.	(b) ITEM NO.	(2) SMR CODE	(3) FEDERAL STOCK NUMBER	(4) PART NUMBER	(5) FSCM	(6) DESCRIPTION USABLE ON CODE	(7) U/M	(8) QTY INC IN UNIT
C-4	24	XAJZZ		13200E7225	97403	.FLANGE SUCTION.....	EA	1
C-4	25	PAFZZ	5305-00-637-1119	MS35214-69	96906	.SCREW,MACHINE.....	EA	1
C-4	26	XBFZZ		13200E7228	97403	.WEIGHT CHK VAL.....	EA	1
C-4	27	XBFZZ		13200E7227	97403	.WEIGHT CHK VAL.....	EA	1
C-4	28	PBFZZ		13200E7226	97403	.GASKET CHK VAL.....	EA	1
C-4	29	PBJZZ	4820-00-174-0339	MS35782-3	96906	COCK DRAIN.....	EA	1
C-4	30	PBDZZ		NAS183-5-13A	80205	STUD PLAIN.....	EA	2
C-4	31	PBDZZ	4730-00-555-1359	MS20913-6CR	96906	PLUG PIPE.....	EA	1
C-4	32	XBHZZ	4320-00-717-1380	13200E7202	97403	PUMP BODY.....	EA	1

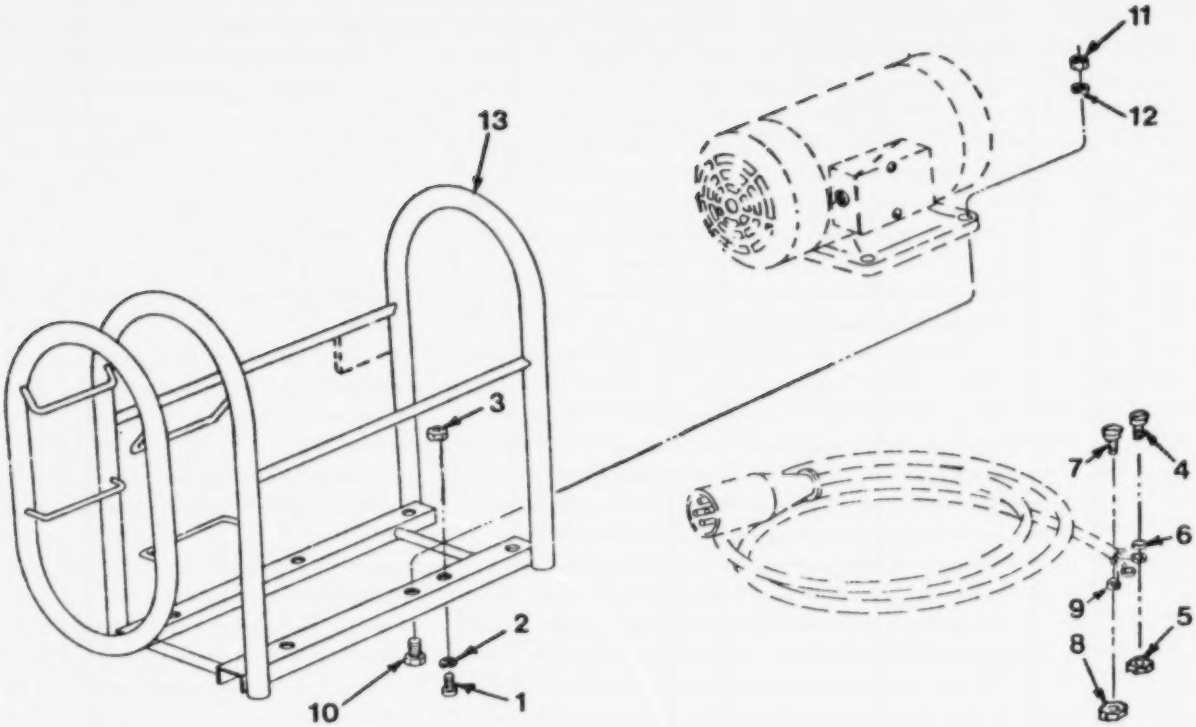

Figure C-1. Frame Assembly

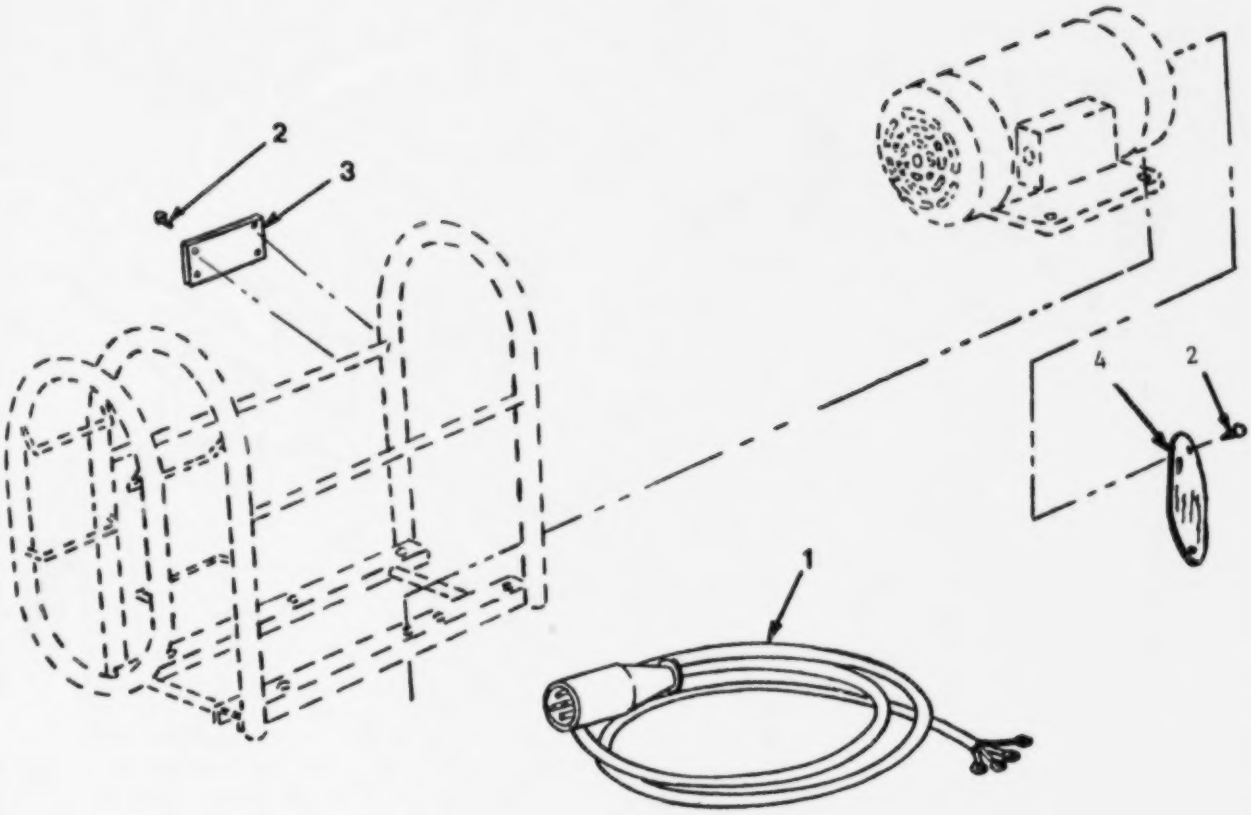

Figure C-2. Accessory Items

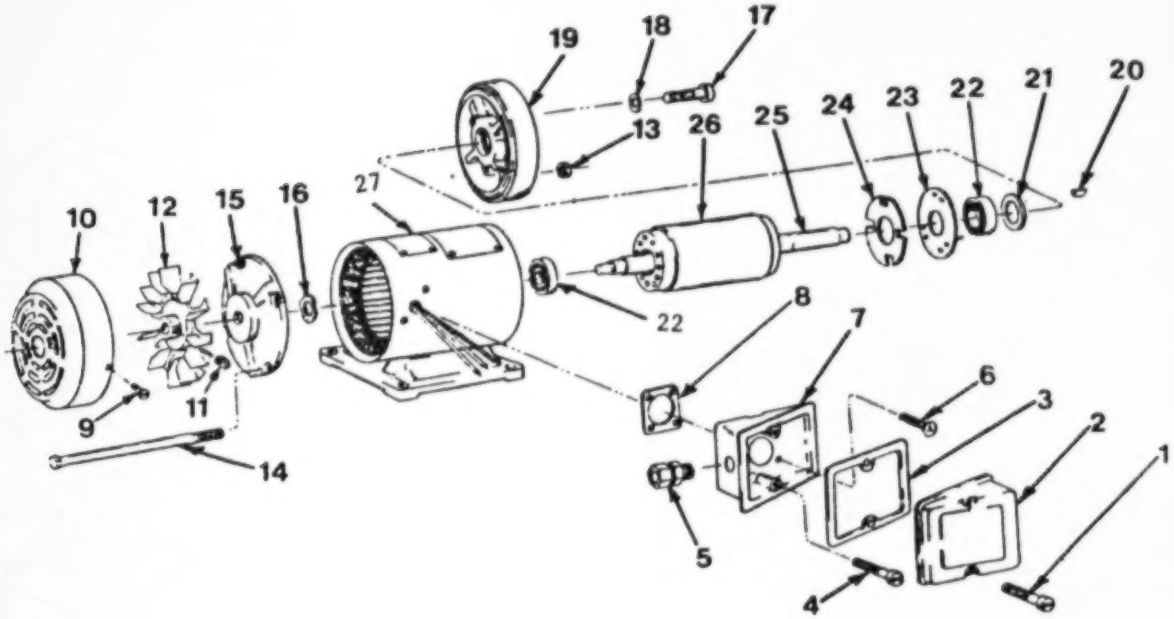

Figure C-3. Electric Motor.

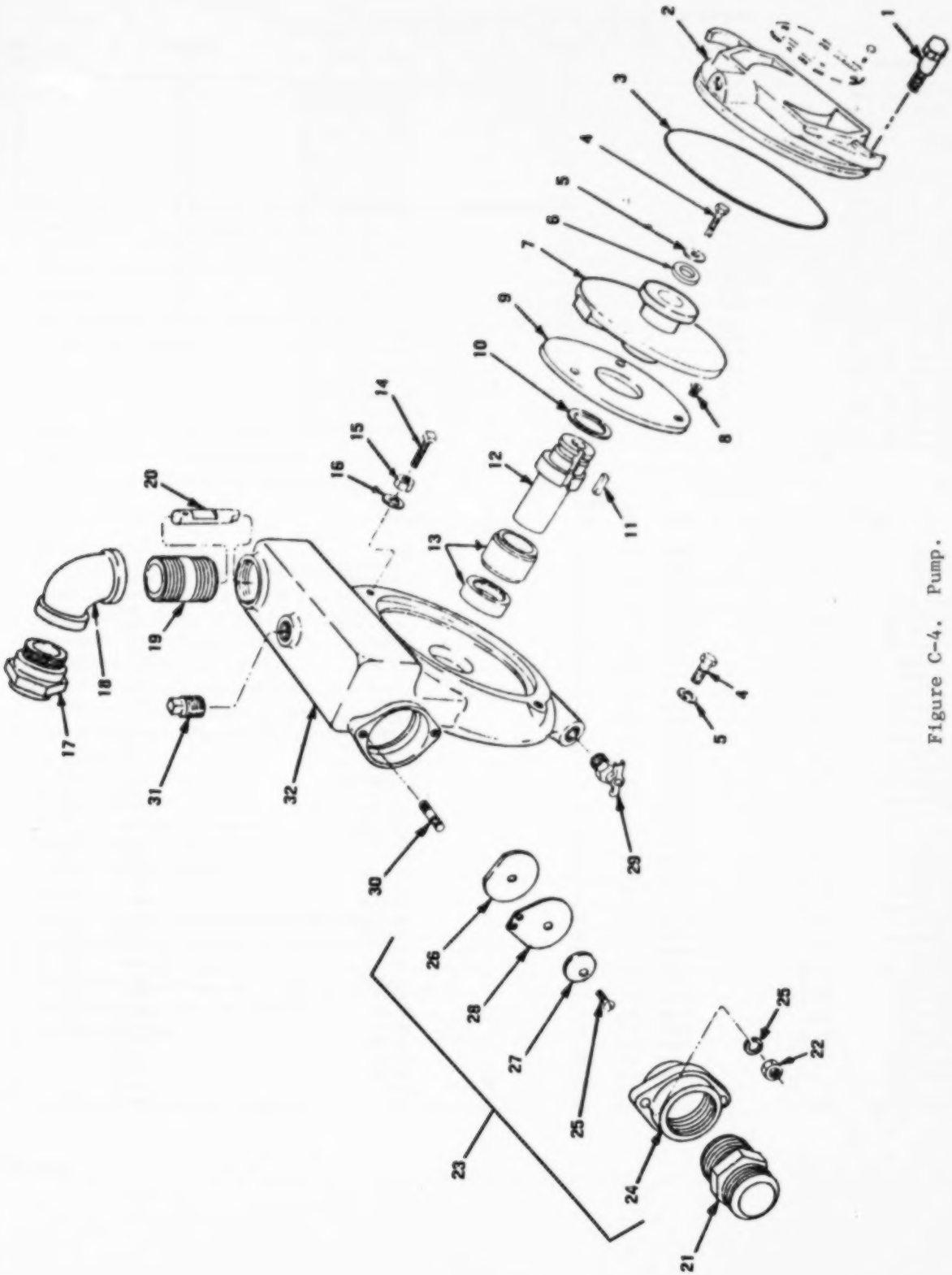

Figure C-4. Pump.

SECTION VI - NATIONAL STOCK NUMBER AND PART NUMBER INDEX

STOCK NUMBER	FIGURE NO.	ITEM NO.
5315-00-043-1787	C-3	20
5310-00-045-3296	C-3	18
5305-00-054-9261	C-4	14
5305-00-068-0502	C-1	1
4320-00-103-8199	C-4	23
3110-00-109-1157	C-3	22
5940-00-114-1317	C-1	6
5310-00-133-4598	C-4	10
5310-00-133-4598	C-4	16
4820-00-174-0339	C-4	29
5940-00-204-9142	C-1	9
5305-00-206-2508	C-3	4
5306-00-225-9093	C-4	4
5305-00-253-5625	C-2	2
5305-00-269-3214	C-1	10
4730-00-277-5636	C-4	18
4730-00-277-8891	C-4	19
5975-00-281-0049	C-3	5
5310-00-407-9566	C-4	5
5330-00-527-8116	C-4	3
4730-00-555-1355	C-4	31
5310-00-582-5965	C-1	2
5305-00-637-1119	C-4	25
5310-00-637-9541	C-1	12
5306-00-686-5722	C-4	1
6105-00-717-1283	C-3	27
6105-00-717-1361	C-3	26
5310-00-717-1380	C-4	32
5310-00-723-4458	C-3	13
5310-00-732-0558	C-1	11
5310-00-761-6882	C-1	3
5305-00-765-2015	C-3	9
4320-00-784-6797	C-4	7
4320-00-784-6799	C-4	12
4320-00-790-6357	C-4	23
6105-00-793-6752	C-3	
5310-00-851-2674	C-4	15
5305-00-855-0961	C-3	1
5310-00-880-7746	C-4	22
5310-00-902-6676	C-1	8
5310-00-903-8282	C-1	5
5305-00-957-6652	C-4	8
6150-00-971-2116	C-2	1
5315-00-989-2342	C-4	11
5305-00-989-7435	C-1	7
5305-00-993-2461	C-1	4
5305-00-995-3441	C-3	17

PART NUMBER	FSCM	FIG. NO.	ITEM NO.
A678607	78086	C-2	3
A678760	78086	C-3	6
CG-5075	03743	C-3	5
MIL-S-22499	81349	C-4	10
MS20066-183	96906	C-4	11
MS20659-109	96906	C-1	6
MS20913-6CR	96906	C-4	31
MS21083N3	96906	C-1	8
MS21083N4	96906	C-1	5
MS21318-46	96906	C-2	2
MS24629-35	96906	C-3	1
Ms25036-12	96906	C-1	9
MS29512-252	96906	C-4	3
MS35198-67	96906	C-4	8
MS35207-264	96906	C-1	7
MS35207-269	96906	C-3	17
MS35207-281	96906	C-1	4
MS35214-69	96906	C-4	25
MS35215-53	96906	C-3	4
MS35338-43	96906	C-3	18
MS35338-44	96906	C-1	2
MS35338-45	96906	C-4	5
MS35338-46	96906	C-1	12
MS35690-404	96906	C-3	13
MS35691-1	96906	C-4	15
MS35756-34	96906	C-3	20
MS35782-3	969C6	C-4	29
MS51953-172	969C6	C-4	19
MS51955-6	96906	C-4	14
MS51967-2	96906	C-1	3
MS51967-8	96906	C-1	11
MS51968-5	96906	C-4	22
MS90725-6	96906	C-1	1
MS90725-64	96906	C-1	10
MS90725-38	96906	C-4	4
NAS1515B4	80205	C-4	16
NAS183-5-13A	80205	C-4	30
02781	05748	C-3	9
13200E7202	97403	C-4	32
13200E7203	97403	C-4	2
13200E7204	97403	C-4	7
13200E7205	97403	C-4	12
13200E7212	97403	C-4	1
13200E7213	97403	C-4	20
13200E7214	97403	C-4	9
13200E7221	97403	C-3	
13200E7222	97403	C-2	1
13200E7224	97403	C-4	23
13200E7225	97403	C-4	24
13200E7226	97403	C-4	28
13200E7227	97403	C-4	27
13200E7228	97403	C-4	26
13200E8806	97403	C-4	13
13214E9380-5	97403	C-4	6
13218E0058-28	97403	C-4	18
13219E2404	97403	C-2	4
205SZZ	38442	C-3	22
33074	20266	C-4	17
36-1008	05472	C-3	24
36-133	05472	C-3	12
36-2118	05472	C-3	27
36-2120	05472	C-3	15
36-2131	05472	C-3	7
36-271	05472	C-3	26
36-37A	05472	C-3	14
36-399B	05472	C-3	25
36-40	05472	C-3	2
36-48	05472	C-3	8
36-49	05472	C-3	3
36-696	05472	C-3	10
47015	20266	C-4	21
52WEB	05472	C-3	16
6-31	05472	C-3	21
6-417	05472	C-3	23

ALPHABETICAL INDEX

	Paragraphs	Pages
D		
Direct support and general support maintenance instructions:		
Centrifugal pump assembly	6-1	6-1
Electric motor assembly	6-7	6-3
Electric motor maintenance	5-5	5-4
Frame	4-15	4-11
Maintenance repair parts	5-2	5-1
Troubleshooting	5-4	5-1
E		
Before disassembly testing	5-5	5-4
Electric motor tabulated data	6-10	6-5
Maintenance allocation chart	B-1	B-1
O		
Operator instructions:		
Detailed lubrication information	3-2	3-1
Identification and tabulated data	1-5	1-1
Operation in dusty or sandy areas	2-7	2-4
Operation in extreme heat	2-6	2-3
Operation in extreme cold	2-5	2-3
Operation in salt water areas	2-9	2-4
Operation of centrifugal pump	2-1	2-1
Preventive maintenance checks and services	3-4	3-1
Starting	2-2	2-1
Stopping	2-3	2-3
Troubleshooting	3-5	3-3
Organizational maintenance instructions:		
Dismantling for movement	4-4	4-4
Electric motor assembly	4-14	4-10
Frame	4-15	4-11
Inspecting and servicing equipment	4-1	4-1
Installation and setting up instructions	4-3	4-1
Maintenance of pump	4-13	4-8
Preventive maintenance checks and services	4-10	4-4
Reinstallation after movement	4-5	4-4
Troubleshooting	4-12	4-6
R		
Repair parts and special tools	C-1	C-1
S		
Storage	7-1	7-1

By Order of the Secretary of the Army:

BERNARD W. ROGERS
General, United States Army
Chief of Staff

Official:

J. C. PENNINGTON
Brigadier General, United States Army
The Adjutant General

Distribution:
To be distributed in accordance with DA Form 12-25A, Operator maintenance requirements for Petroleum Distribution.

☆U.S. GOVERNMENT PRINTING OFFICE: 1990 - 262-912/30551

RECOMMENDED CHANGES TO EQUIPMENT TECHNICAL MANUALS

SOMETHING WRONG WITH THIS MANUAL?

THEN. . .JOT DOWN THE DOPE ABOUT IT ON THIS FORM, TEAR IT OUT, FOLD IT AND DROP IT IN THE MAIL!

FROM: (YOUR UNIT'S COMPLETE ADDRESS)
PFC JOHN DOE
CoA, 3d ENGINEER BN
FT. LEONARD WOOD MO 63108

DATE

PUBLICATION NUMBER	DATE	TITLE
TM 5-4320-274-14&P	3 NOV 78	PUMP, CENTRIFUGAL NSN 4320-01-010-5888

BE EXACT. . .PIN-POINT WHERE IT IS

PAGE NO.	PARA-GRAPH	FIGURE NO.	TABLE NO.	IN THIS SPACE TELL WHAT IS WRONG AND WHAT SHOULD BE DONE ABOUT IT:
6	2-1 a			In line 6 of paragraph 2-1a the manual states the engine has 6 cylinders. The engine on my set only has 4 cylinders. Change the manual to show 4 cylinders
81		4-3		Callout 16 on figure 4-3 is pointing at a bolt. In the key to fig. 4-3, item 16 is called a shim. Please correct one or the other.
125	line 20			I ordered a gasket, item 19 on figure B-16 by NSN 2910-00-762-3001. I got a gasket but it doesn't fit. Supply says I got what I ordered so the NSN is wrong. Please give me a good NSN

SAMPLE

TYPED NAME, GRADE OR TITLE, AND TELEPHONE NUMBER: JOHN DOE, PFC (268) 317-7111

SIGN HERE: John Doe

DA FORM 1 AUG 74 2028-2 (TEST)

P.S.--IF YOUR OUTFIT WANTS TO KNOW ABOUT YOUR MANUAL "FIND," MAKE A CARBON COPY OF THIS AND GIVE IT TO YOUR HEADQUARTERS.

TEAR ALONG DOTTED LINE

FILL IN YOUR UNIT'S ADDRESS

FOLD BACK

DEPARTMENT OF THE ARMY

Commander
US Army Troop Support and Aviation
Materiel Readiness Command
ATTN: DRSTS-MTPS
4300 Goodfellow Boulevard
St. Louis, MO 63120

TEAR ALONG DOTTED LINE

FOLD BACK

RECOMMENDED CHANGES TO EQUIPMENT TECHNICAL MANUALS

SOMETHING WRONG WITH THIS MANUAL?

THEN. . .JOT DOWN THE DOPE ABOUT IT ON THIS FORM, TEAR IT OUT, FOLD IT AND DROP IT IN THE MAIL!

FROM: (YOUR UNIT'S COMPLETE ADDRESS)

DATE

PUBLICATION NUMBER	DATE	TITLE
TM 5-4320-274-14&P	3 NOV 1978	PUMP, CENTRIFUGAL NSN 4320-01-010-5888

BE EXACT. . .PIN-POINT WHERE IT IS

PAGE NO.	PARA-GRAPH	FIGURE NO.	TABLE NO.

IN THIS SPACE TELL WHAT IS WRONG AND WHAT SHOULD BE DONE ABOUT IT:

TYPED NAME, GRADE OR TITLE, AND TELEPHONE NUMBER

SIGN HERE:

TEAR ALONG DOTTED LINE

DA FORM 1 AUG 74 2028-2 (TEST)

P.S.--IF YOUR OUTFIT WANTS TO KNOW ABOUT YOUR MANUAL "FIND," MAKE A CARBON COPY OF THIS AND GIVE IT TO YOUR HEADQUARTERS.

FILL IN YOUR UNIT'S ADDRESS

FOLD BACK

DEPARTMENT OF THE ARMY

Commander
US Army Troop Support and Aviation
Materiel Readiness Command
ATTN: DRSTS-MTPS
4300 Goodfellow Boulevard
St. Louis, MO 63120

TEAR ALONG DOTTED LINE

FOLD BACK

REVERSE OF DA FORM 2028-2 (TEST)

RECOMMENDED CHANGES TO EQUIPMENT TECHNICAL MANUALS

SOMETHING WRONG WITH THIS MANUAL?

THEN. . .JOT DOWN THE DOPE ABOUT IT ON THIS FORM, TEAR IT OUT, FOLD IT AND DROP IT IN THE MAIL!

FROM: (YOUR UNIT'S COMPLETE ADDRESS)

DATE

PUBLICATION NUMBER	DATE	TITLE
TM 5-4320-274-14&P	3 NOV 1978	PUMP, CENTRIFUGAL NSN 4320-01-010-5888

BE EXACT. . .PIN-POINT WHERE IT IS

PAGE NO.	PARA-GRAPH	FIGURE NO.	TABLE NO.

IN THIS SPACE TELL WHAT IS WRONG AND WHAT SHOULD BE DONE ABOUT IT:

TYPED NAME, GRADE OR TITLE, AND TELEPHONE NUMBER

SIGN HERE:

DA FORM 1 AUG 74 2028-2 (TEST)

P.S.--IF YOUR OUTFIT WANTS TO KNOW ABOUT YOUR MANUAL "FIND," MAKE A CARBON COPY OF THIS AND GIVE IT TO YOUR HEADQUARTERS.

TEAR ALONG DOTTED LINE

FILL IN YOUR UNIT'S ADDRESS

FOLD BACK

DEPARTMENT OF THE ARMY

Commander
US Army Troop Support and Aviation
Materiel Readiness Command
ATTN: DRSTS-MTPS
4300 Goodfellow Boulevard
St. Louis, MO 63120

TEAR ALONG DOTTED LINE

FOLD BACK

REVERSE OF DA FORM 2028-2 (TEST)

RECOMMENDED CHANGES TO EQUIPMENT TECHNICAL MANUALS

SOMETHING WRONG WITH THIS MANUAL?

THEN. . .JOT DOWN THE DOPE ABOUT IT ON THIS FORM, TEAR IT OUT, FOLD IT AND DROP IT IN THE MAIL!

FROM: (YOUR UNIT'S COMPLETE ADDRESS)

DATE

PUBLICATION NUMBER	DATE	TITLE
TM 5-4320-274-14&P	3 NOV 1978	PUMP, CENTRIFUGAL NSN 4320-01-010-5888

BE EXACT. . .PIN-POINT WHERE IT IS

PAGE NO.	PARA-GRAPH	FIGURE NO.	TABLE NO.

IN THIS SPACE TELL WHAT IS WRONG AND WHAT SHOULD BE DONE ABOUT IT:

TYPED NAME, GRADE OR TITLE, AND TELEPHONE NUMBER

SIGN HERE:

TEAR ALONG DOTTED LINE

DA FORM 1 AUG 74 2028-2 (TEST)

P.S.--IF YOUR OUTFIT WANTS TO KNOW ABOUT YOUR MANUAL "FIND," MAKE A CARBON COPY OF THIS AND GIVE IT TO YOUR HEADQUARTERS.

FILL IN YOUR UNIT'S ADDRESS

FOLD BACK

DEPARTMENT OF THE ARMY

Commander
US Army Troop Support and Aviation
Materiel Readiness Command
ATTN: DRSTS-MTPS
4300 Goodfellow Boulevard
St. Louis, MO 63120

TEAR ALONG DOTTED LINE

FOLD BACK

REVERSE OF DA FORM 2028-2 (TEST)

The Metric System and Equivalents

Linear Measure

1 centimeter = 10 millimeters = .39 inch
1 decimenter = 10 centimeters = 3.94 inches
1 meter = 10 decimeters = 39.37 inches
1 dekameter = 10 meters = 32.8 feet
1 hectometer = 10 dekameters = 328.08 feet
1 kilometer = 10 hectometers = 3,280.8 feet

Weights

1 centigram = 10 milligrams = .15 grain
1 decigram = 10 centigrams = 1.54 grains
1 gram = 10 decigrams = .035 ounce
1 dekagram = 10 grams = .35 ounce
1 hectogram = 10 dekagrams = 3.52 ounces
1 kilogram = 10 hectograms = 2.2 pounds
1 quintal = 100 kilograms = 220.46 pounds
1 metric ton = 10 quintals = 1.1 short tons

Liquid Measure

1 centiliter = 10 milliters = .34 fl. ounce
1 deciliter = 10 centiliters = 3.38 fl. ounces
1 liter = 10 deciliters = 38.82 fl. ounces
1 dekaliter = 10 liters = 2.64 gallons
1 hectoliter = 10 dekaliters = 26.42 gallons
1 kiloliter = 10 hectoliters = 264.18 gallons

Square Measure

1 sq. centimeter = 100 sq. millimeters = .155 sq. inch
1 sq. decimenter = 100 sq. centimeters = 15.5 sq. inches
1 sq. meter (centare) = 100 sq. decimeters = 10.76 sq. feet
1 sq. dekameter (are) = 100 sq. meters = 1,076.4 sq. feet
1 sq. hectometer (hectare) = 100 sq. dekameters = 2.47 acres
1 sq. kilometer = 100 sq. hectometers = .386 sq. mile

Cubic Measure

1 cu. centimeter = 1000 cu. millimeters = .06 cu. inch
1 cu. decimeter = 1000 cu. centimeters = 61.02 cu. inches
1 cu meter = 1000 cu. decimeters = 35.31 cu. feet

Approximate Conversion Factors

To change	*To*	*Multiply by*	*To change*	*To*	*Multiply by*
inches	centimeters	2.540	ounce-inches	newton-meters	.007062
feet	meters	.305	centimeters	inches	.394
yards	meters	.914	meters	feet	3.280
miles	kilometers	1.609	meters	yards	1.094
square inches	square centimeters	6.451	kilometers	miles	.621
square feet	square meters	.093	square centimeters	square inches	.155
square yards	square meters	.836	square meters	square feet	10.764
square miles	square kilometers	2.590	square meters	square yards	1.196
acres	square hectometers	.405	square kilometers	square miles	.386
cubic feet	cubic meters	.028	square hectometers	acres	2.471
cubic yards	cubic meters	.765	cubic meters	cubic feet	35.315
fluid ounces	milliliters	29,573	cubic meters	cubic yards	1.308
pints	liters	.473	milliliters	fluid ounces	.034
quarts	liters	.946	liters	pints	2.113
gallons	liters	3.785	liters	quarts	1.057
ounces	grams	28.349	liters	gallons	.264
pounds	kilograms	.454	grams	ounces	.035
short tons	metric tons	.907	kilograms	pounds	2.205
pound-feet	newton-meters	1.365	metric tons	short tons	1.102
pound-inches	newton-meters	.11375			

Temperature (Exact)

°F	Fahrenheit temperature	5/9 (after subtracting 32)	Celsius temperature	°C

PIN : 036870-000